SID12404

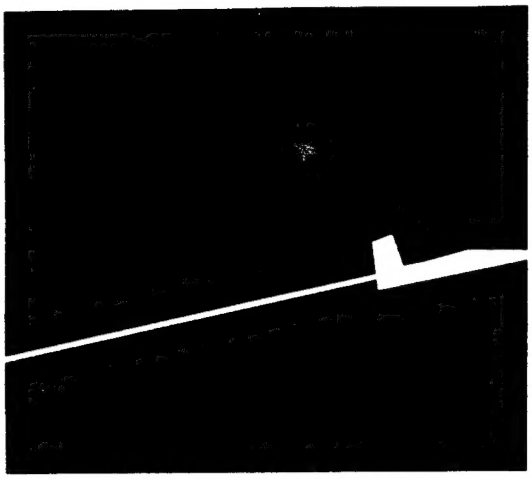

SIDAC

Supportability Investment Decision Analysis Center

Contract No. F33657-92-D-2055/0063
CDRL A001, Data Item DI-MISC-80508
Report No. SID/TR-95/0339

(Unclassified)

TECHNICAL REPORT – STUDY SERVICES

for

Analysis of the Air Force Systems Modification Process and Policies

Prepared for

HQ USAF/LGSI
1030 Air Force Pentagon
Washington, DC 20330-1030

13 September 1995

Prepared by

Synergy, Inc.
1763 Columbia Rd., NW
Washington, DC 20009-2834

Submitted by

SIDAC
5100 Springfield Pike
Dayton, OH 45431

DTIC QUALITY INSPECTED 4

19970127 056

DISTRIBUTION STATEMENT A

Approved for public release;
Distribution Unlimited

This report has been approved for publication.

Maj Randy Moller
Logistics Analysis Team
HQ USAF/LGSI
1030 Air Force Pentagon
Washington, DC 20330-1030

FOR THE COMMANDER

Approved for public release; distribution is unlimited.

REPORT DOCUMENTATION PAGE

Form Approved
OMB No. 0704-0188

Public reporting burden for this collection of information is estimated to average 1 hour per response, including the time for reviewing instructions, searching existing data sources, gathering and maintaining the data needed, and completing and reviewing the collection of information. Send comments regarding this burden estimate or any other aspect of this collection of information, including suggestions for reducing this burden, to Washington Headquarters Services, Directorate for Information Operations and Reports, 1213 Jefferson Davis Highway, Suite 1204, Arlington, VA 22202-4302, and to the Office of Management and Budget. Paperwork Reduction Project (0704-0188), Washington, DC 20503.

1. AGENCY USE ONLY *(Leave blank)*	2. REPORT DATE	3. REPORT TYPE AND DATES COVERED
	13 September 1995	Technical Report/Study Services

4. TITLE AND SUBTITLE

Technical Report/Study Services for Analysis of the Air Force Systems Modification Process and Policies.

5. FUNDING NUMBERS

Contract No. F33657-92-D-2055

Delivery Order No. 0061

6. AUTHOR(S)

Valera, Giselle E.

7. PERFORMING ORGANIZATION NAME(S) AND ADDRESS(S)

Synergy, Inc.
1763 Columbia Rd, NW
Washington, DC 20009

8. PERFORMING ORGANIZATION REPORT NUMBER

SID/TR-95/0339

9. SPONSORING/MONITORING AGENCY NAME(S) AND ADDRESS(ES)

HQ USAF/LGSI
1030 Air Force Pentagon
Washington, DC 20330-1030

10. SPONSORING/MONITORING AGENCY REPORT NUMBER

SID 12404

11. SUPPLEMENTARY NOTES

12a. DISTRIBUTION/AVAILABILITY STATEMENT

Approved for Public Release; Distribution is Unlimited

12b. DISTRIBUTION CODE

A

13. ABSTRACT *(Maximum 200 words)*

This technical report contains the final project report for Analysis of the Air Force Modification Process and Policies.

14. SUBJECT TERMS

Air Force modification process.

15. NUMBER OF PAGES

8

16. PRICE CODE

17. SECURITY CLASSIFICATION OF REPORT	18. SECURITY CLASSIFICATION OF THIS PAGE	19. SECURITY CLASSIFICATION OF ABSTRACT	20. LIMITATION OF ABSTRACT
Unclassified	Unclassified	Unclassified	

Contract No. F33657-92-D-2055
SIDAC Task Number 95, Delivery Order No. 0061
CDRL A001, Data Item No. DI-MISC-80508
SID/TR-95/0339

(Unclassified)

TECHNICAL REPORT/STUDY SERVICES

for

Analysis of the Air Force Systems Modification Process and Policies

Prepared for

HQ USAF/LGSI
1030 Air Force Pentagon
Washington, DC 20330-1030

13 September 1995

Prepared by

Synergy, Inc.
1763 Columbia Road, NW
Washington, DC 20009-2834

Submitted by

SIDAC
5100 Springfield Pike
Dayton, OH 45431-1231

This report is a work prepared for the United States Government by Battelle. In no event shall either the United States Government or Battelle have any responsibility or liability for any consequences of any use, misuse, inability to use, or reliance upon the information contained herein, nor does either warrant or otherwise represent in any way the accuracy, adequacy, efficacy, or applicability of the contents hereof.

SECTION 1
INTRODUCTION

The Air Force modification process provides a vehicle for initiating, tracking, and implementing modifications to Air Force configured items. It offers ways to correct deficiencies, extend the life, and improve the capabilities of existing Air Force systems, equipment, and munitions.

The Air Force modifications process was perceived to be lengthy and complex. Thorough analysis of the modifications process was necessary in order to identify disconnects and improve program execution. The Air Force selected the Integrated Definition Language 0 (IDEF0) methodology to assist in this analysis. This methodology is the standard JLSC and DoD industrial engineering tool used to model existing DoD program processes. Synergy was tasked to support the Modifications Process Working Group (MPWG) by facilitating IDEF modeling workshops, performing analysis, and distributing information kits to Working Group members. The result of this analysis, an AS-IS IDEF0 Activity Model, will serve as a foundation for future analysis.

SECTION 2
AS-IS IDEF0 ACTIVITY MODEL

SUMMARY

The AS-IS IDEF0 Activity Model depicts the activities required to manage the modification of an asset. The model was built based on input from approximately 40 participants. These participants represented System Directorate Offices (SPOs), MAJCOMs, Financial Management, Acquisition Policy, and Logistics Policy.

DESCRIPTION OF RESULTS

The AS-IS Activity Model, contained in Appendix A, identified several disconnects. Disconnects are defined as hindrances to having a process that is flexible, responsive, accurate, timely, and executable.

The disconnects identified in the AS-IS Activity Model suggest the lack of a proper infrastructure for modification managers. There is a lack of guidance, current and regular training, and effective information systems. The model demonstrates these disconnects in various ways. Guidance on how to plan and manage the modification of assets is limited. In the AS-IS Activity Model, no official training processes were identified; therefore, all training was assumed to be on-the-job. Finally, information systems specified are few and insufficient. For these reasons, the processes as identified in the AS-IS Activity Model are not completely accurate, timely, or executable.

However, the AS-IS Activity Model does indicate that the processes required to manage the modification of an asset are relatively straightforward, flexible, and responsive. The model demonstrates this through the existence of program direction, which is program-specific direction for modifications. In accordance with Air Force policy, program direction may force changes in the scope of a modification at any point throughout its development and acquisition. The mod plan and budget submission can change as a result of any new program direction. The mod plan

will determine how and when the asset is altered, while the budget submission acquires the funds needed to accomplish the modification. Production reports and Single Manager decisions are additional responsive measures that allow a modification program to continually reassess its progress.

CONCLUSIONS

The AS-IS IDEF0 Activity Modeling effort concluded that the disconnected processes identified do not require complete reengineering; however, all of the processes required to manage the modification of an asset must be merged with a comprehensive and effective infrastructure.

FUTURE ANALYSIS

To accomplish all of the above, Synergy recommends that future analyses include a TO-BE IDEF0 Activity Model, a TO-BE IDEF1x Data Model, a TO-BE Data Products Model, and an Implementation Plan.

A TO-BE IDEF0 Activity Model serves as a blueprint for changes recommended to resolve disconnects identified in the AS-IS IDEF0 Activity Model. A TO-BE IDEF1x Data Model and a TO-BE Data Products Model provide a means for thoroughly modeling the data to support the integration of business functions. Finally, an Implementation Plan will provide the MPWG with a comprehensive strategy for the reengineering of the modification process. The objectives of the TO-BE modeling effort will be to improve the time it takes to acquire modification kits, reduce administrative burden and Air Force oversight requirements, and remove unnecessary contract requirements and cost.

APPENDIX A

CONTENTS

NODE	TITLE	VERSION
	AS-IS MODEL:	
KC-1	Table of Contents Page 1	1
KC-2	Table of Contents Page 2	1
KC-3	Reader List	1
KC-4	Basic IDEF Tips	1
KC-5	Basic IDEF Tips	1
KC-6	Kit Annotation Instructions	1
KC-7	Example of Marked-up Page	1
A-1	Mod Process Environment Diagram	1
A-0	Context of Mod Process	1
A0	Support User Mod Requirements	1
A1	Develop Mod Direction	1
A12	Develop Program Direction	1
A122	Develop Acquisition Decision	1
A2	Determine Mod Solution	1
A3	Fund Mod	1
A31	Budget Resources	1
A32	Execute Resources	1
A321	Issue Program Authority	1
A4	Plan Mod	1
A41	Develop Initial Mod Plan	1
A412	Cost Mod	1
A413	Plan Production	1
A414	Assess Risk	1
A43	Prepare Contract	1
A434	Prepare Source Selection Plan	1

CONTENTS

NODE	TITLE	VERSION
A5	Alter Asset	1
A51	Develop Kit	1
A54	Modify Asset	1
A6	Monitor Performance	1
FEO-1	The Purpose of a Modification	1
FEO-2	Explanation of Mechanisms in the Model	1
Text	Facing page text precedes every model diagram	
Glossary	As-Is Model Glossary	

KIT: 5	AUTHOR: Mod IDEF Working Group PROJECT: Mod Process Analysis MODEL: Mod Process As-Is DATE: 09/01/95 NOTES: 1 2 3 4 5 6 7 8 9 10		WORKING	READER DATE	CONTEXT:
		X	DRAFT		
			RECOMMENDED		
			PUBLICATION		

READER	OFFICE	COMMENTS TO AUTHOR	RESPONSE TO READER
Mr Vic Alexander	SM-ALC/FMIC(1)		
Mr David Arnold			
Lt Col Ben Baker	HQ USAF/LGMM		
Mr Wally Beard	HQ USAF/LGSY		
Lt Col Art Bierschbach	HQ USAF/XORC		
Lt Col Sue Caudill	HQ USAF/LGSY		
SMSgt Don Cleveland	HQ AFSOC/LGMX		
Ms Terry Ellis	OO-ALC/LMDC		
Lt Col Michael Ennis	Defense Systems Management College		
Ms Jane Folz	SAF/FMBIA		
Mr Bob Forney	WR-ALC/FMLRB		
Mr Ruben Garcia	SA-ALC/LFCS		
Ms Janice Gavern	ASC/ALSL		
Mr Wade Gibbs	OO-ALC/LICO		
Mr Bud Hayden	HQ ACC/DRMR		
CMSgt Randy Holt	HQ AETC/XORL		
Mr John Kappert	HQ AFC4A/SYYM		
Lt Col Mike Kruthaupt	HQ AFOTEC/TSS		
Ms Jill Levy	SM-ALC/LAFY		
Maj Sandra Ludwig	SAF/AQXA		
Ms Nancy Maddox	WR-ALC/FMLRB		
Ms Kathy Manning	OO-ALC/FMB		
Ms Carolyn Nash	OO-ALC/FMB-1		
Mr David Nielson	SA-ALC/LADRB		
Mr Larry Olson	SM-ALC/LIIAA		
Mr Jerry Qualls	CASC/POA		
Mr Mike Schlier	OO-ALC/LACS		
Mr Bob Shrum	HQ AFMC/DRM		
SMSgt Andy Stubblefield	HQ AMC/XPQP		
CMSgt Bob Thompson	HQ AFRES/LGMAH		
SSgt Randal Totten	HQ AFSPC CSS/SCRR		
Mr Jim Veal	78MSS/DPET-L		
Maj Steve Wagner	HQ AFSPC/LGMBP		
Ms Kathy Willis	HQ USAF/LGSY		
Ms Linda Willis	WR-ALC/FMICG		
MSgt Samuel Young	HQ AFSPC CSS/SCOM		

NODE: KC-3	TITLE: Reader List	VERSION: 1

Basic IDEF Tips

- **IDEF (Integrated Computer Aided Manufacturing Definition or, more simply, Integration Definition) is a structured analysis methodology used to describe activities and their associated, inputs, controls, outputs, and mechanisms (ICOMS).**
- **By applying the IDEF0 methodology to the analysis of organizations, the analyst can produce models that document all or a part of an organization's current business processes, isolate problem areas, and specify improvements in business process and the use of associated data and other resources.**
- **The Purpose of the IDEF0 model determines the depth of the analysis and tells you when you are done. The Purpose is not the purpose of the modeller but how the model is to be used, and what questions are to be answered using the model.**
- **The Viewpoint of the model determines the scope of the analysis, where you start, what you will address, what you will pay attention to, and what level of detail you require.**
- **A Box in an IDEF0 diagram represents an activity, a process within which something is transformed from one thing into another.**
- **Arrows represent things that exist. What goes into a model as an input must come out after some transform as an output; likewise all outputs should reflect an input. Arrows do not represent flows or movement in IDEF0; a "flow" is represented in IDEF0 by an activity that transforms across space.**
- **An extremely simple example of an IDEF0 activity is "Bake a Cake". Flour, eggs, and water are Inputs to the activity; the recipe Controls how the cake is to be baked; the Mechanism acting to bake the cake is the cook and the oven, and the Output is a finished, delicious cake.**
- **Shaded Mechanisms or Control arrow segments indicate that all arrow branches retain the label of the parent ICOM.**
- **The shading of activity boxes is shown on leaf nodes (those activities not decomposed).**
- **A glossary immediatedly follows the IDEF0 model. All ICOMS, activities, annotations, and entities are in the glossary. A CAPITALIZED TERM in the text pages refers to a term that is defined in the glossary.**

KIT: 5	AUTHOR: Mod IDEF Working Group		WORKING	READER DATE	CONTEXT:
	PROJECT: Mod Process Analysis	X	DRAFT		
	MODEL: Mod Process As-Is DATE: 09/01/95		RECOMMENDED		
	NOTES: 1 2 3 4 5 6 7 8 9 10		PUBLICATION		

VIEWPOINT: Person who requires a cake.

PURPOSE: To document the activity required to bake a cake.

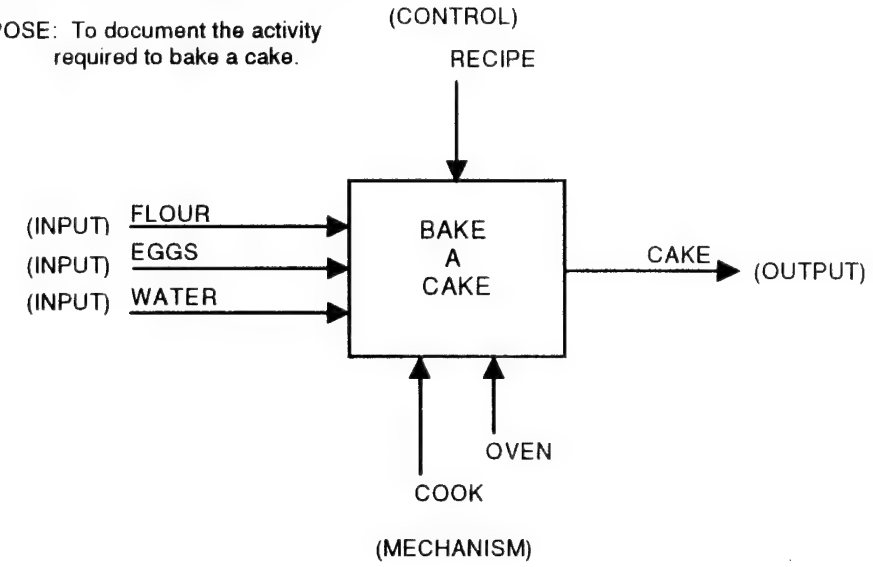

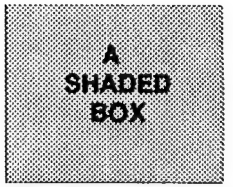

A shaded box indicates that the activity is entirely outside the scope of the model.

A Model Annotation generally denotes one particular component of a bundled arrow.

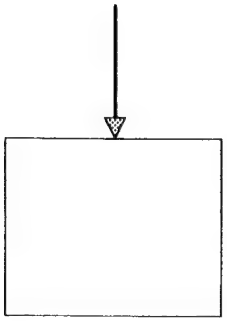

A gray-filled control arrow indicates that the control is also an input.

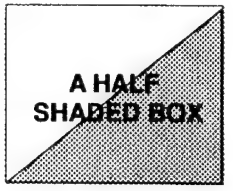

A half shaded box indicates that the activity is partially outside the scope of the model.

NODE: KC-5	TITLE: Basic IDEF Tips	VERSION: 1

KIT: 5	AUTHOR: Mod IDEF Working Group PROJECT: Mod Process Analysis MODEL: Mod Process As-Is DATE: 09/01/95 NOTES: 1 2 3 4 5 6 7 8 9 10		WORKING	READER DATE	CONTEXT:
		X	DRAFT		
			RECOMMENDED		
			PUBLICATION		

Kit Annotation Instructions

To ensure that all of your comments are accurately reflected in the next iteration of the Kit, we have provided an example of a marked-up diagram. Please use the following conventions when making your annotations to the diagrams.

- **Make a photocopy of your Kit prior to making comments. If we missed anyone, please obtain a photocopy from your colleague and we will add you to the distribution list.**
- **Use a red pen to annotate your changes and comments to the diagrams.**
- **Limit the number of comments per page to ten or less. If you need to make more than ten comments, use another copy of the diagram (this is part of why we suggest that you make a copy of everything before you start making comments).**
- **Number each comment from 1 to 10, with the number in a circle at the place that the comment refers to. Strike out the corresponding NOTES number directly below the PROJECT name. For example, if you made three notes, strike out the number 3. This helps us make sure we keep track of all your comments.**
- **Make all comments directly on the page in question. For lengthy comments or significant change proposals, please use the enclosed Change Proposal Form.**
- **Should you send in a group response, please indicate the participants.**
- **If you introduce a new term, please provide a definition. If we do not have a definition we cannot use the term.**
- **If you use a term that has already been incorporated into the model, refer to the glossary to ensure that your use of the term corresponds with our definition. Please comment on any discrepancies .**
- **Provide a written explanation for all changes to diagrams and text pages.**

KIT: 5	AUTHOR: Mod IDEF Working Group PROJECT: Mod Process Analysis MODEL: Mod Process As-Is DATE: 09/01/95 NOTES: ~~1~~ ~~2~~ ~~3~~ 4 5 6 7 8 9 10		WORKING	READER	DATE	CONTEXT:
		X	DRAFT			
			RECOMMENDED			
			PUBLICATION			

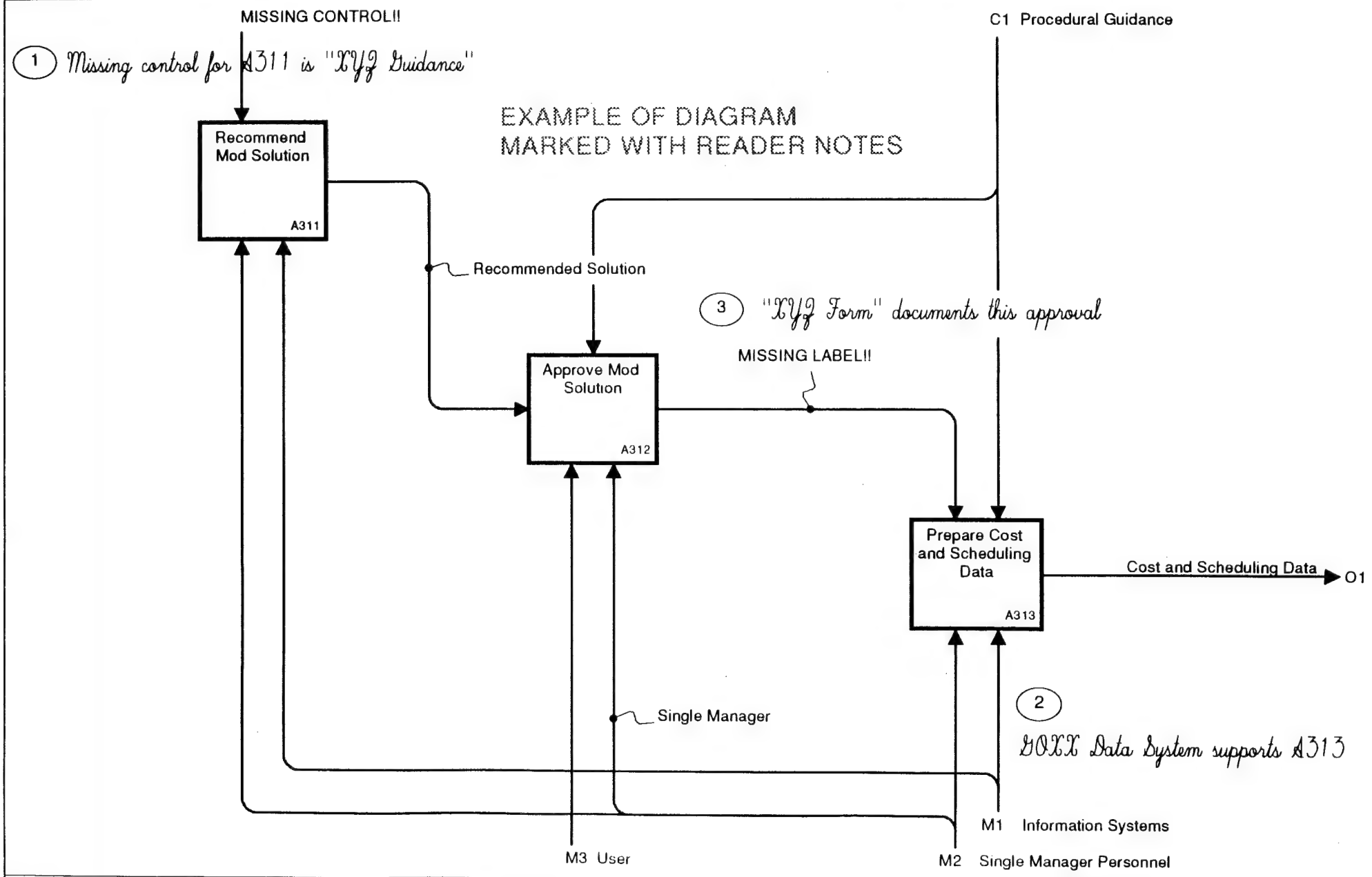

NODE: KC-7	TITLE: Example of Marked Up Page	VERSION: 1

KIT:	AUTHOR:	DATE:		WORKING	READER	DATE	CONTEXT:
5	Mod IDEF Working Group	09/01/95	X	DRAFT			
	PROJECT: Mod Process Analysis			RECOMMENDED			
	MODEL: Mod Process As-Is			PUBLICATION			
	NOTES: 1 2 3 4 5 6 7 8 9 10						

Diagram Story

MOD PERSONNEL support a USER'S need for a MODIFICATION through the MOD PROCESS. The MOD PROCESS gets DIRECTION from CONGRESS, the DOD COMPTROLLER, and SECDEF. The MOD PROCESS is initiated by the USER'S submission of a REQUIREMENT. When an ASSET has successfully been altered, the ASSET is returned to the USER along with a COMPLIANCE NOTIFICATION. In addition to altering the ASSET, the MOD PROCESS is required to provide the DOD COMPTROLLER with budgetary information and PERFORMANCE REPORTS.

Assumptions, Notes, and Issues

This diagram shows the interaction between the MOD PROCESS and external entities, and only includes the inputs, controls, outputs, and mechanisms that are relevant to the MOD PROCESS.

The USER and CONTRACTOR are modeled as mechanisms only within the scope of their roles in the MOD PROCESS.

The term "Kit" found in the upper left-hand corner of the page refers to the IDEF modeling package, and should not be confused with the KIT assembled to modify an ASSET.

Opportunities

NODE:	A-1T	TITLE:	Mod Process Environment Diagram	VERSION:	1

KIT:	AUTHOR:				CONTEXT:
5	AUTHOR: Mod IDEF Working Group PROJECT: Mod Process Analysis MODEL: Mod Process As-Is DATE: 09/01/95 NOTES: 1 2 3 4 5 6 7 8 9 10		WORKING	READER DATE	Top
		X	DRAFT		
			RECOMMENDED		
			PUBLICATION		

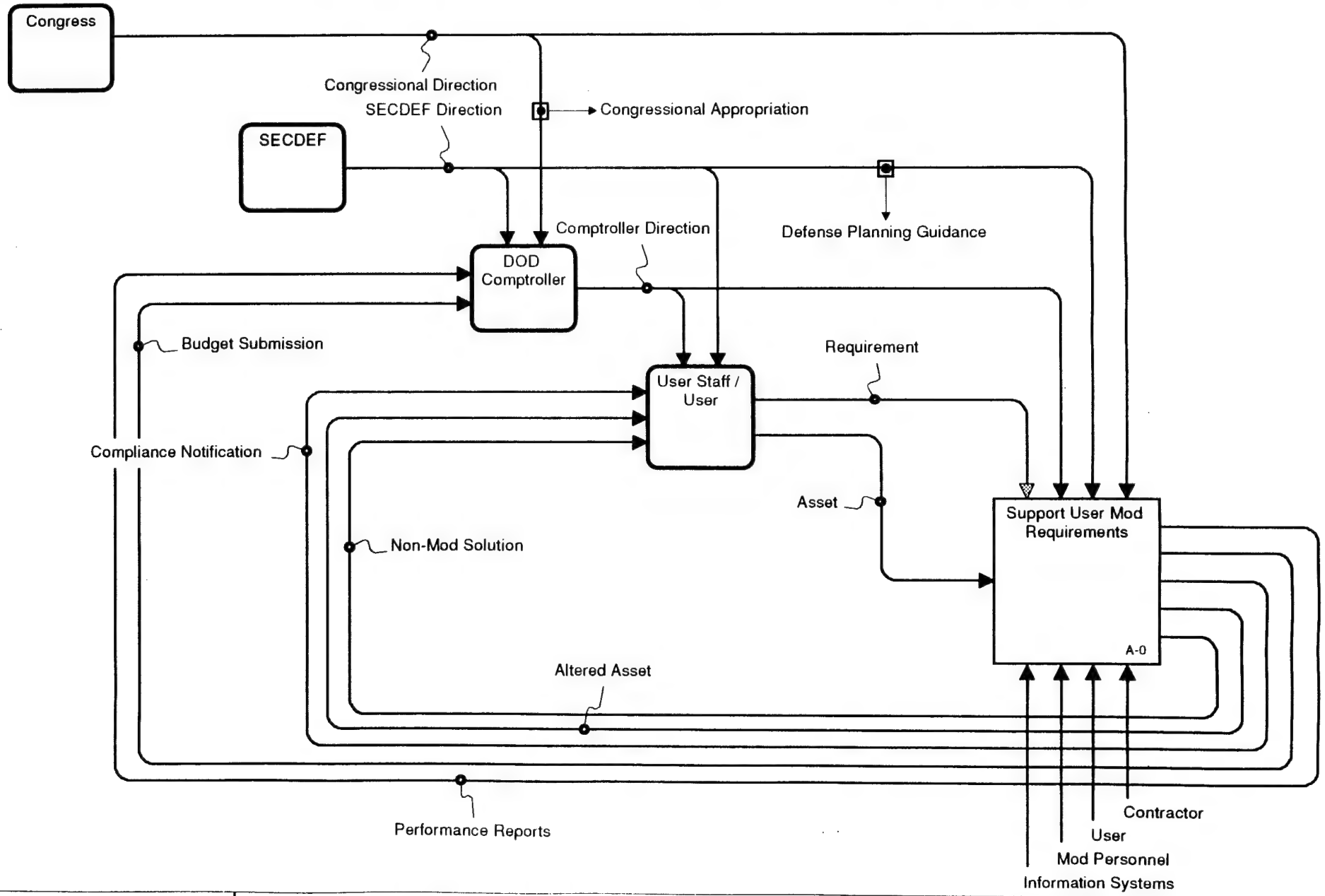

NODE:	A-1	TITLE:	Mod Process Environment Diagram	VERSION:	1

KIT:	AUTHOR:	DATE:		WORKING	READER	DATE	CONTEXT:
5	Mod IDEF Working Group		X	DRAFT			
	PROJECT: Mod Process Analysis			RECOMMENDED			
	MODEL: Mod Process As-Is	09/01/95		PUBLICATION			
	NOTES: 1 2 3 4 5 6 7 8 9 10						

Diagram Story

The USER is the customer that identifies a potential need for a MODIFICATION to an ASSET. COMPTROLLER DIRECTION, SECDEF DIRECTION, and CONGRESSIONAL DIRECTION will dictate which MODS will take place during the Fiscal Year. Not all requests for MODS will be funded or accepted. ASSETS may be modified either by a DOD or non-DOD organization. Once the MOD is in production it is tracked for performance and compliance.

Assumptions, Notes, and Issues

This diagram summarizes the interaction between the MOD PROCESS and the entities on the Mod Process Environment Diagram.

This model is only applicable to programs designated as permanent MODIFICATIONS.

Opportunities

NODE:	A-0T	TITLE:	Context of Mod Process	VERSION:	1

KIT: 5	AUTHOR: Mod IDEF Working Group PROJECT: Mod Process Analysis MODEL: Mod Process As-Is DATE: 09/01/95 NOTES: 1 2 3 4 5 6 7 8 9 10		WORKING	READER DATE	CONTEXT:
		X	DRAFT		
			RECOMMENDED		
			PUBLICATION		

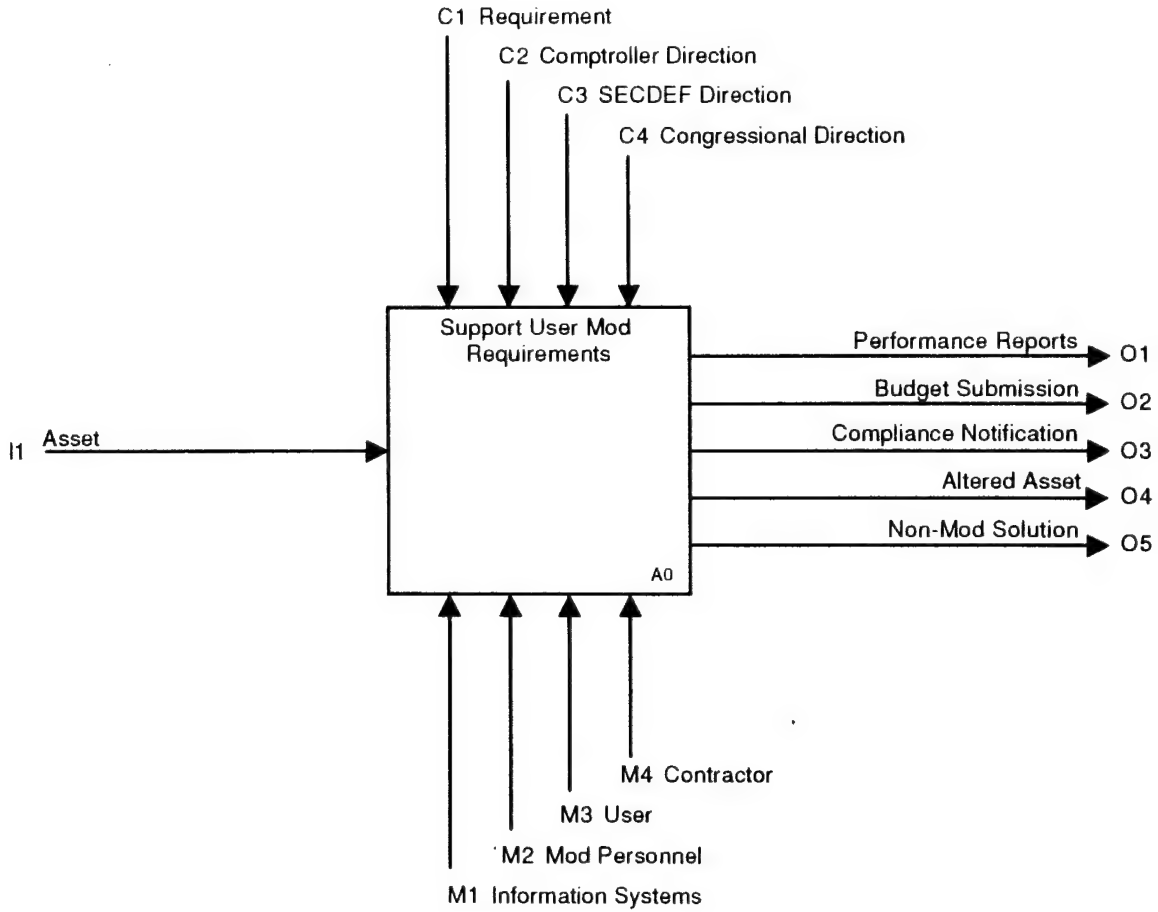

Purpose: To model the activities required to manage a single modification of an asset.

Viewpoint: Mod Staff

NODE: A-0	TITLE: Context of Mod Process	VERSION: 1

KIT: 5	AUTHOR: Mod IDEF Working Group PROJECT: Mod Process Analysis MODEL: Mod Process As-Is DATE: 09/01/95 NOTES: 1 2 3 4 5 6 7 8 9 10		WORKING	READER DATE	CONTEXT:
		X	DRAFT		
			RECOMMENDED		
			PUBLICATION		

Diagram Story

The ultimate goal of the MOD PROCESS is the successful alteration of an ASSET for greater capability and maintainability. Upon receipt of a REQUIREMENT, MOD PERSONNEL determine whether or not the REQUIREMENT will be fulfilled by a MODSOLUTION. If the MOD SOLUTION is funded, a MOD PLAN is developed and a CONTRACTOR is selected to alter the ASSET. Performance is monitored throughout the MOD PROCESS, and a COMPLIANCE NOTIFICATION is issued to mark the completion of the MOD.

Assumptions, Notes, and Issues

MOD PERSONNEL currently conduct on-the-job training. In the future they will have to adhere to AF MODIFICATION PROCESS DESCRIPTION (TEST).

Opportunities

Training of MOD PERSONNEL must be incorporated into the infrastructure of the processes modeled on this diagram.

NODE:	A0T	TITLE:	Support User Mod Requirements	VERSION:	1

KIT:	AUTHOR:	PROJECT:	MODEL:	NOTES:	DATE:			CONTEXT:
5	Mod IDEF Working Group	Mod Process Analysis	Mod Process As-Is	1 2 3 4 5 6 7 8 9 10	09/01/95			

	WORKING	READER	DATE
X	DRAFT		
	RECOMMENDED		
	PUBLICATION		

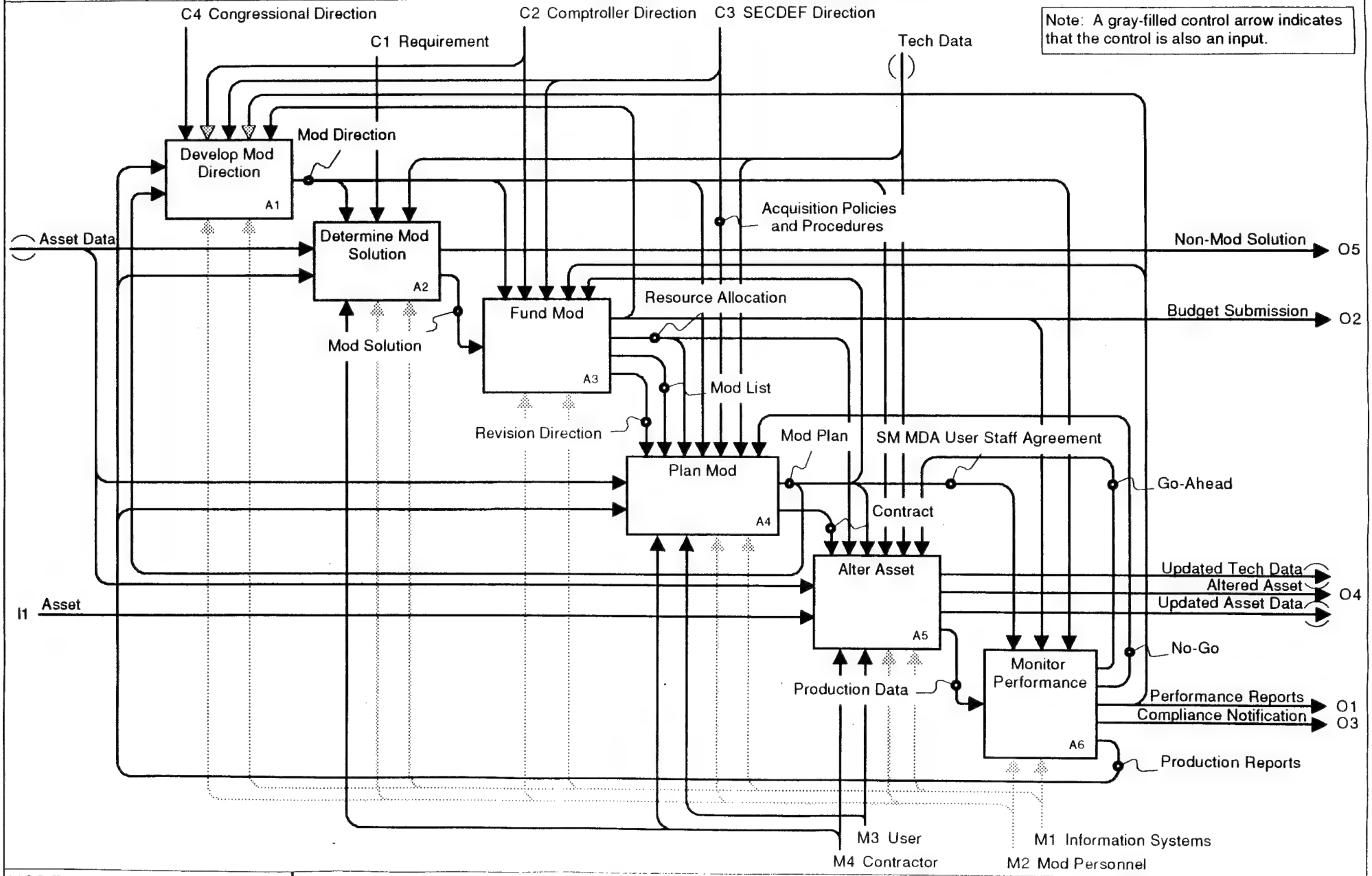

NODE:	TITLE:	VERSION:
A0	Support User Mod Requirements	1

KIT: 5	AUTHOR: Mod IDEF Working Group PROJECT: Mod Process Analysis MODEL: Mod Process As-Is DATE: 09/01/95 NOTES: 1 2 3 4 5 6 7 8 9 10		WORKING	READER DATE	CONTEXT:
			DRAFT		
			RECOMMENDED		
			PUBLICATION		

Diagram Story

The diagram DEVELOP MOD DIRECTION may be broken down into two distinct activities which generate DIRECTION to control the MOD PROCESS. The activity DEVELOP PROCESS DIRECTION creates policies and procedures which govern the MOD PROCESS as a whole, and the activity DEVELOP PROGRAM DIRECTION creates DIRECTION which governs the pace and continuation of specific MOD programs. PROCESS DIRECTION and PROGRAM DIRECTION together make up MOD DIRECTION.

Assumptions, Notes, and Issues

Opportunities

KIT:	AUTHOR:	PROJECT:	MODEL:	NOTES:	DATE:
5	Mod IDEF Working Group	Mod Process Analysis	Mod Process As-Is	1 2 3 4 5 6 7 8 9 10	09/01/95

	WORKING	READER	DATE
X	DRAFT		
	RECOMMENDED		
	PUBLICATION		

CONTEXT:

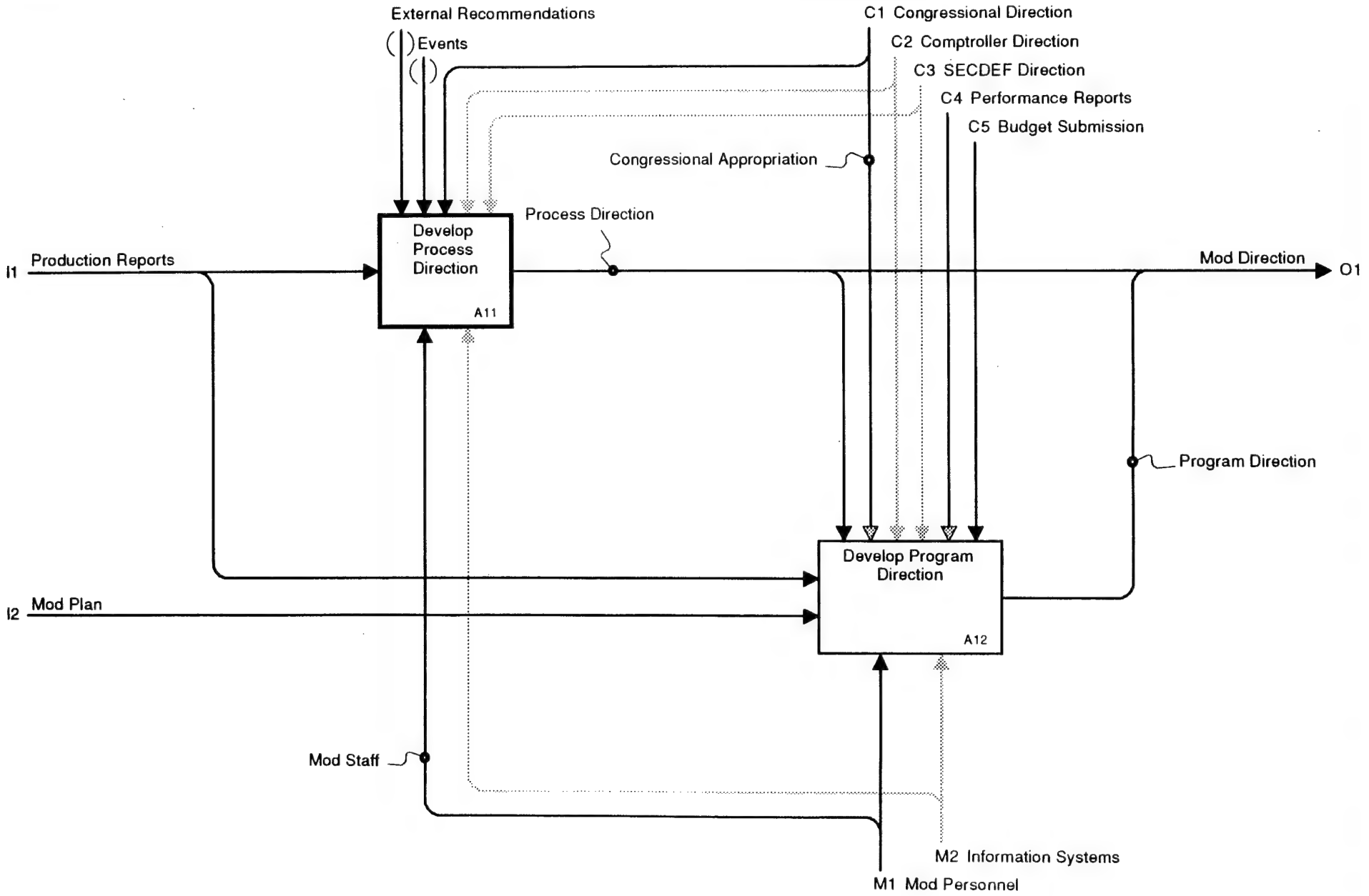

NODE:	A1	TITLE:	Develop Mod Direction	VERSION:	1

KIT: 5	AUTHOR: Mod IDEF Working Group PROJECT: Mod Process Analysis MODEL: Mod Process As-Is DATE: 09/01/95 NOTES: 1 2 3 4 5 6 7 8 9 10		WORKING	READER DATE	CONTEXT:
		X	DRAFT		
			RECOMMENDED		
			PUBLICATION		

Diagram Story

PROGRAM DIRECTION is developed to govern specific MOD programs PROGRAM DIRECTION will generally take the form of an ACQUISITION DECISION or a PROGRAM MANAGEMENT DIRECTIVE. The MILESTONE DECISION AUTHORITY develops the ACQUISITION DECISION following each acquistion phase. For some acquisition programs this decision is expressed by an Acquisition Decision Memorandum. PROGRAM MANAGEMENT DIRECTIVES are developed by MOD PERSONNEL and must be approved by MAD, XOR, or HQ USAF/LG. OUT-OF-CYCLE PROGRAM DIRECTION is developed in a crisis situation or when funds are reprogrammed. This is done in order to speed up the MODIFICATION of pertinant ASSETS.

Assumptions, Notes, and Issues

Opportunities

Disconnects that exist within the activity DEVELOP PROGRAM MANAGEMENT DIRECTIVE are being addressed by a PROGRAM MANAGEMENT DIRECTIVE Process Action Team (PAT).

PROCESS DIRECTION must be developed for the activity DEVELOP OUT-OF-CYCLE PROGRAM DIRECTION.

Specific INFORMATION SYSTEMS must be developed and incorporated into the infrastructure of the processes modeled on this diagram.

NODE: A12T	TITLE: Develop Program Direction	VERSION: 1

KIT:	AUTHOR:				CONTEXT:
5	AUTHOR: Mod IDEF Working Group PROJECT: Mod Process Analysis MODEL: Mod Process As-Is DATE: 09/01/95 NOTES: 1 2 3 4 5 6 7 8 9 10		WORKING	READER DATE	☐ ■
		X	DRAFT		
			RECOMMENDED		
			PUBLICATION		

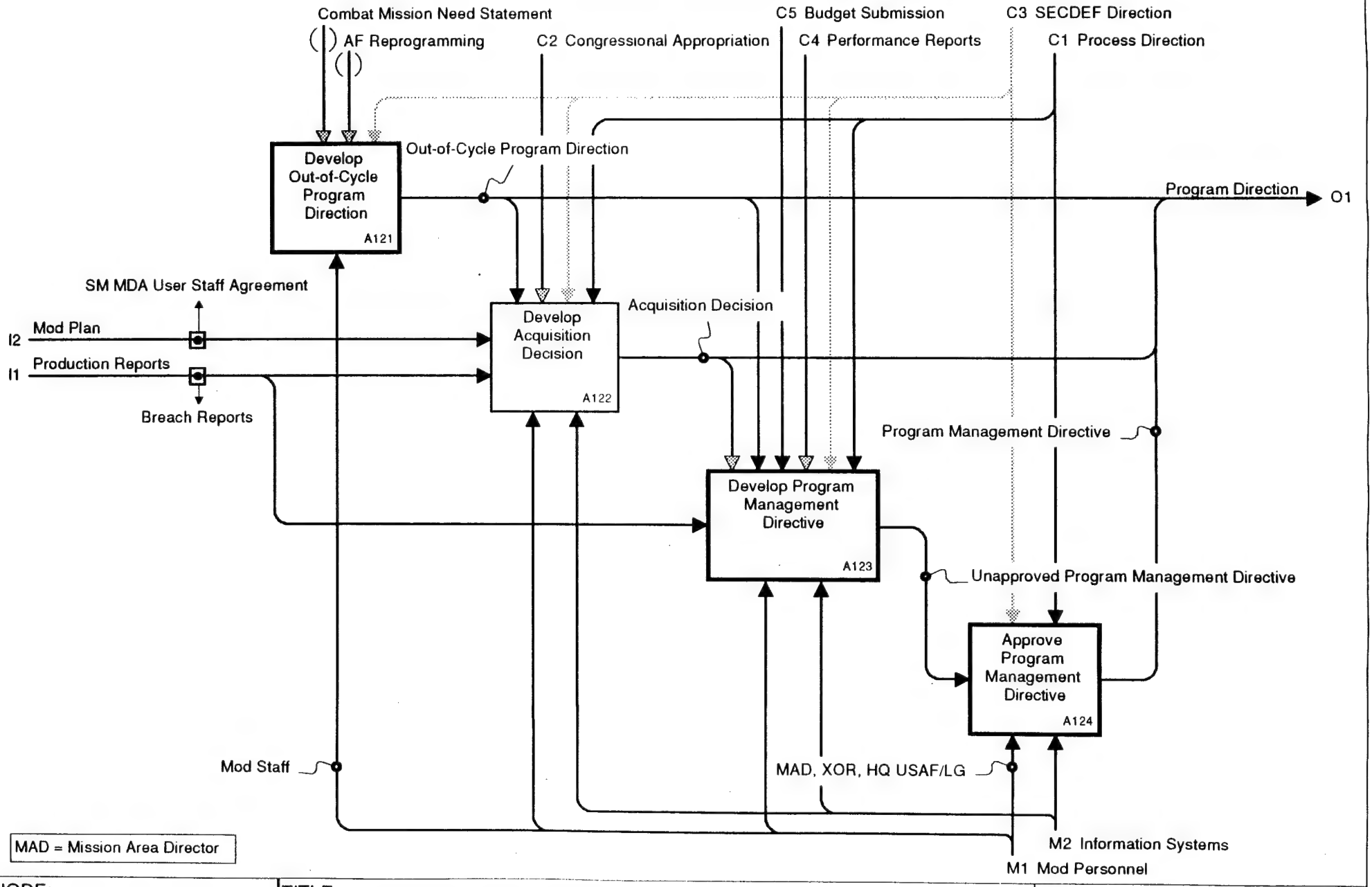

NODE:	TITLE:	VERSION:
A12	Develop Program Direction	1

KIT: 5	AUTHOR: Mod IDEF Working Group PROJECT: Mod Process Analysis MODEL: Mod Process As-Is DATE: 09/01/95 NOTES: 1 2 3 4 5 6 7 8 9 10		WORKING	READER	DATE	CONTEXT:
		X	DRAFT			
			RECOMMENDED			
			PUBLICATION			

Diagram Story

PROGRAM MANAGEMENT REVIEWS are held at regular intervals to establish the progress of a MOD PROGRAM. The resulting PROGRAM STATUS is evaluated using CURRENT EXIT CRITERIA, and an ACQUISITION DECISION is made governing the continuation of the MODIFICATION to the next milestone. The ACQUISITION DECISION contains ENTRY/EXIT CRITERIA for the next ACQUISITION DECISION.

Assumptions, Notes, and Issues

Opportunities

Specific INFORMATION SYSTEMS must be developed and incorporated into the infrastructure of the processes modeled on this diagram.

NODE: A122T	TITLE: Develop Acquisition Decision	VERSION: 1

KIT:	AUTHOR:	Mod IDEF Working Group		WORKING	READER	DATE	CONTEXT:
5	PROJECT:	Mod Process Analysis	X	DRAFT			
	MODEL:	Mod Process As-Is	DATE: 09/01/95	RECOMMENDED			
	NOTES: 1 2 3 4 5 6 7 8 9 10			PUBLICATION			

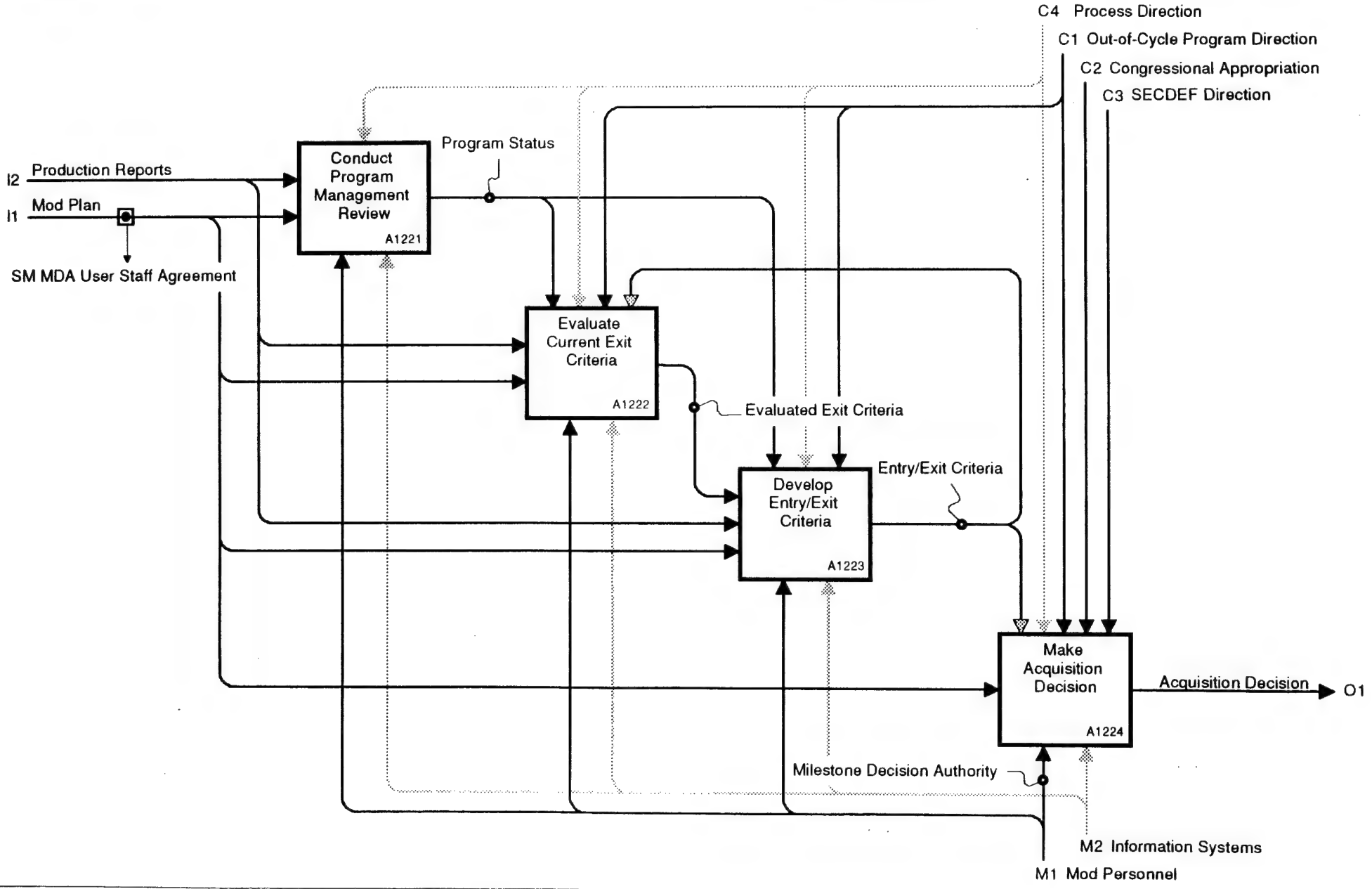

NODE:	A122	TITLE:	Develop Acquisition Decision	VERSION:	1

KIT:	AUTHOR:	DATE:		WORKING	READER	DATE	CONTEXT:
5	Mod IDEF Working Group	09/01/95	X	DRAFT			
	PROJECT: Mod Process Analysis			RECOMMENDED			
	MODEL: Mod Process As-Is			PUBLICATION			
	NOTES: 1 2 3 4 5 6 7 8 9 10						

Diagram Story

Upon receiving a REQUIREMENT for a MODIFICATION, SM PERSONNEL review the REQUIREMENT with USER STAFF to ensure a proper understanding of their needs. With assistance from the SINGLE MANAGER COMMUNITY and PRODUCT IMPROVEMENT TEAMS, ENGINEERS DEVELOP MOD SOLUTION ALTERNATIVES for addressing the USER'S needs. When feasibility studies are conducted on the proposed alternatives, POTENTIAL MATERIAL STRATEGIES are identified, each with an INITIAL COST AND RISK assessment. With a recommendation from SM PERSONNEL, USER STAFF determine the optimal material strategy for meeting their REQUIREMENT. This may take the form of either a MOD SOLUTION or NON-MOD SOLUTION. If all the proposed strategies are rejected, ENGINEERS will continue to DEVELOP MOD SOLUTION ALTERNATIVES until a acceptable solution has been submitted.

Assumptions, Notes, and Issues

Opportunities

Specific INFORMATION SYSTEMS must be developed and incorporated into the infrastructure of the processes modeled on this diagram.

NODE:	TITLE:	VERSION:
A2T	Determine Mod Solution	1

KIT:	AUTHOR:	Mod IDEF Working Group		WORKING	READER	DATE	CONTEXT:
5	PROJECT:	Mod Process Analysis	X	DRAFT			
	MODEL:	Mod Process As-Is	DATE: 09/01/95	RECOMMENDED			
	NOTES: 1 2 3 4 5 6 7 8 9 10			PUBLICATION			

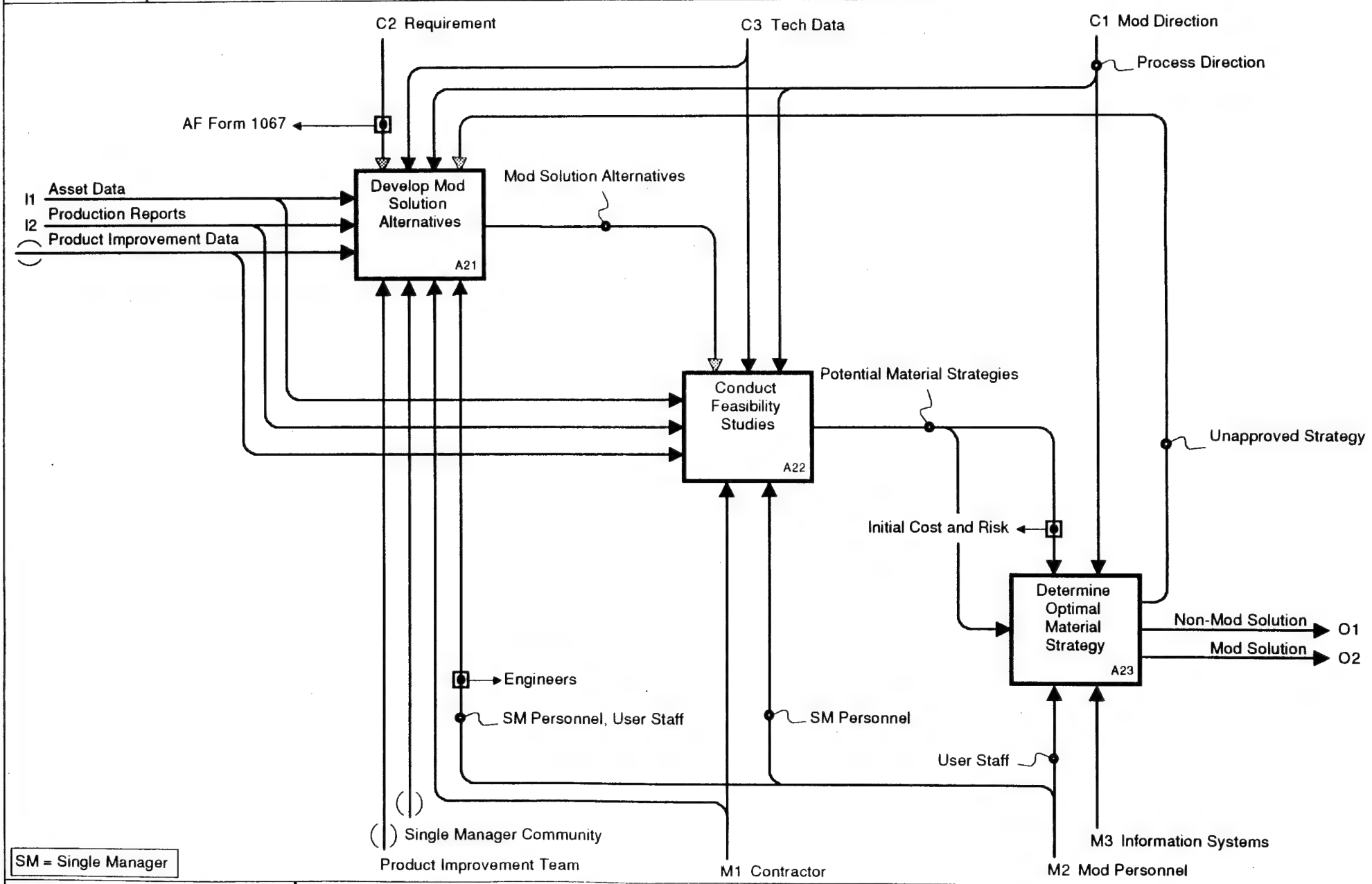

NODE:	A2	TITLE:	Determine Mod Solution	VERSION:	1

KIT: 5	AUTHOR: Mod IDEF Working Group PROJECT: Mod Process Analysis MODEL: Mod Process As-Is DATE: 09/01/95 NOTES: 1 2 3 4 5 6 7 8 9 10		WORKING	READER DATE	CONTEXT:
		X	DRAFT		
			RECOMMENDED		
			PUBLICATION		

Diagram Story

In order to allocate funding for a MOD, the MOD must be budgeted for in a BUDGET SUBMISSION. Funds are executed for a MOD in the form of RESOURCE ALLOCATIONS.

Assumptions, Notes, and Issues

MOD costs are budgeted five years in advance.

Once the requested funds are received they must be executed within three years.

Opportunities

NODE: A3T	TITLE: Fund Mod	VERSION: 1

| KIT: | AUTHOR: | | |

KIT:	AUTHOR:	DATE:		WORKING	READER	DATE	CONTEXT:
5	PROJECT: Mod Process Analysis		X	DRAFT			
	MODEL: Mod Process As-Is	09/01/95		RECOMMENDED			
	NOTES: 1 2 3 4 5 6 7 8 9 10			PUBLICATION			

Diagram Story

Before a MODIFICATION is funded, it must be included in the BUDGET SUBMISSION. For this to occur, P3A DATA must be validated by HQ USAF/LGS to identify any discrepancies with respect to PERFORMANCE REPORTS and PROCESS DIRECTION. INVALID P3A DATA results in the reallocation of funding and revision of the MOD PLAN. REVISION DIRECTION exits the diagram, and a revised MOD PLAN containing new P3A DATA reenters the diagram to be validated once again. When P3A DATA has been validated, total costs for the MODIFICATION are reconciled by weapon system with the USER FUNDING PROFILE and the MODIFICATION is included in the BUDGET SUBMISSION. If total costs cannot be reconciled, the process is repeated.

Assumptions, Notes, and Issues

MAJCOMS prioritize MODS by their associated INITIAL COST AND RISK. These estimates may not be as accurate as the ESTIMATED COST or RISK ASSESSMENT contained in the MOD PLAN, but the FYDP budget cycle requires the early submission of these estimates.

Opportunities

PROCESS DIRECTION must be developed for the activity REALLOCATE FUNDING.

Specific INFORMATION SYSTEMS must be developed for the activities REALLOCATE FUNDING and IDENTIFY MAJCOM PRIORITIES.

NODE:	A31T	TITLE:	Budget Resources	VERSION:	1

KIT:	AUTHOR:				CONTEXT:
5	Mod IDEF Working Group		WORKING	READER DATE	
	PROJECT: Mod Process Analysis	X	DRAFT		
	MODEL: Mod Process As-Is DATE: 09/01/95		RECOMMENDED		
	NOTES: 1 2 3 4 5 6 7 8 9 10		PUBLICATION		

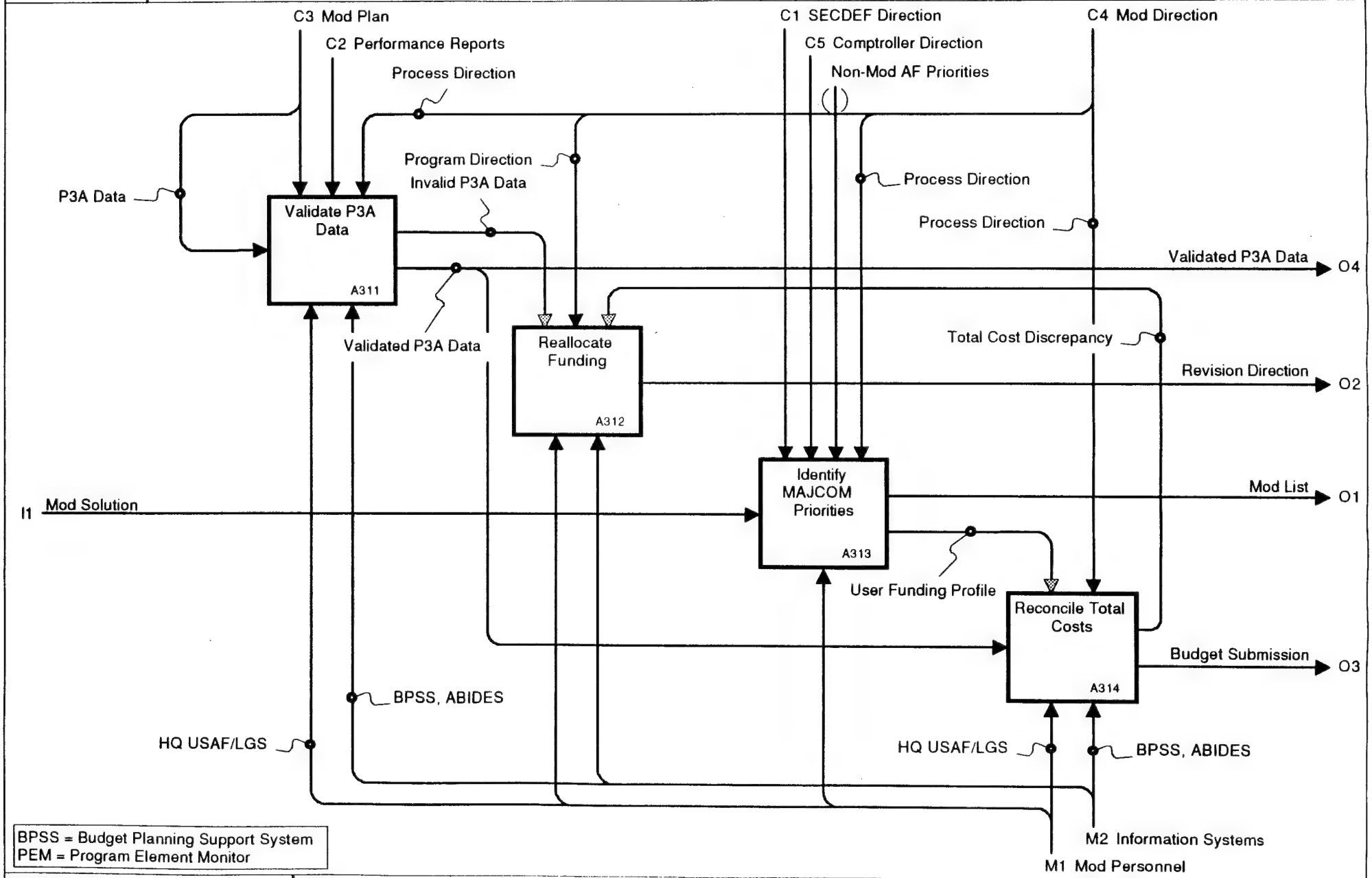

BPSS = Budget Planning Support System
PEM = Program Element Monitor

NODE:	TITLE:	VERSION:
A31	Budget Resources	1

KIT:	AUTHOR:	DATE:		WORKING	READER DATE	CONTEXT:
5	**Mod IDEF Working Group**					
	PROJECT: **Mod Process Analysis**		X	DRAFT		
	MODEL: **Mod Process As-Is**	09/01/95		RECOMMENDED		
	NOTES: 1 2 3 4 5 6 7 8 9 10			PUBLICATION		

Diagram Story

A MODIFICATION cannot be completed without RESOURCE ALLOCATION MOD PERSONNEL use VALIDATED P3A DATA to ISSUE PROGRAM AUTHORITY in accordance with COMPTROLLER DIRECTION and OUT-OF-CYCLE DIRECTION. BUDGET AUTHORITY allocateds funds to weapon system programs. VALIDATED PROGRAM AUTHORITY is combined with BUDGET AUTHORITY to comprise the RESOURCE ALLOCATION.

Assumptions, Notes, and Issues

PROGRAM AUTHORITY is MOD-specific, while BUDGET AUTHORITY is for weapon system programs.

The activities in the decomposition of ISSUE PROGRAM AUTHORITY are representative of those that occur in the decomposition of ISSUE BUDGET AUTHORITY as well.

Opportunities

The activity DISTRIBUTE FUNDS is not value-added to the diagram EXECUTE RESOURCES. AFMC/FMA and ALC/FM act simply as clearing houses. This activity could be eliminated by the automatic transfer of funds.

PROCESS DIRECTION must be developed for the activity ISSUE PROGRAM AUTHORITY.

Specific INFORMATION SYSTEMS must be developed for the activities VALIDATED FUNDING AUTHORITY and ISSUE BUDGET AUTHORITY.

NODE:	A32T	TITLE:	Execute Resources	VERSION:	1

| KIT: | AUTHOR: | | |

| KIT: | AUTHOR: | | |

| KIT: | AUTHOR: | | |

KIT: 5	AUTHOR: Mod IDEF Working Group PROJECT: Mod Process Analysis MODEL: Mod Process As-Is DATE: 09/01/95 NOTES: 1 2 3 4 5 6 7 8 9 10		WORKING	READER DATE	CONTEXT:
		X	DRAFT		
			RECOMMENDED		
			PUBLICATION		

Diagram Story

The MOD LIST identifies MODIFICATIONS that will receive funding, as outlined by RESOURCE ALLOCATION TEAMS, and initiates the development of an INITIAL MOD PLAN. A MOD PLAN may need to be revised several times before a final plan is agreed upon. The MOD PLAN is used to prepare a CONTRACT for the alteration of an ASSET.

Assumptions, Notes, and Issues

A non-DOD CONTRACTOR that helps develop an INITIAL MOD PLAN cannot bid on the CONTRACT that evolves out of it.

The activity REVISE MOD PLAN reiterates the activities that occur in DEVELOP INITIAL MOD PLAN.

Opportunities

NODE: A4T	TITLE: Plan Mod	VERSION: 1

KIT:	AUTHOR:	Mod IDEF Working Group		WORKING	READER	DATE	CONTEXT:
5	PROJECT:	Mod Process Analysis	X	DRAFT			
	MODEL:	Mod Process As-Is	DATE: 09/01/95	RECOMMENDED			
	NOTES: 1 2 3 4 5 6 7 8 9 10			PUBLICATION			

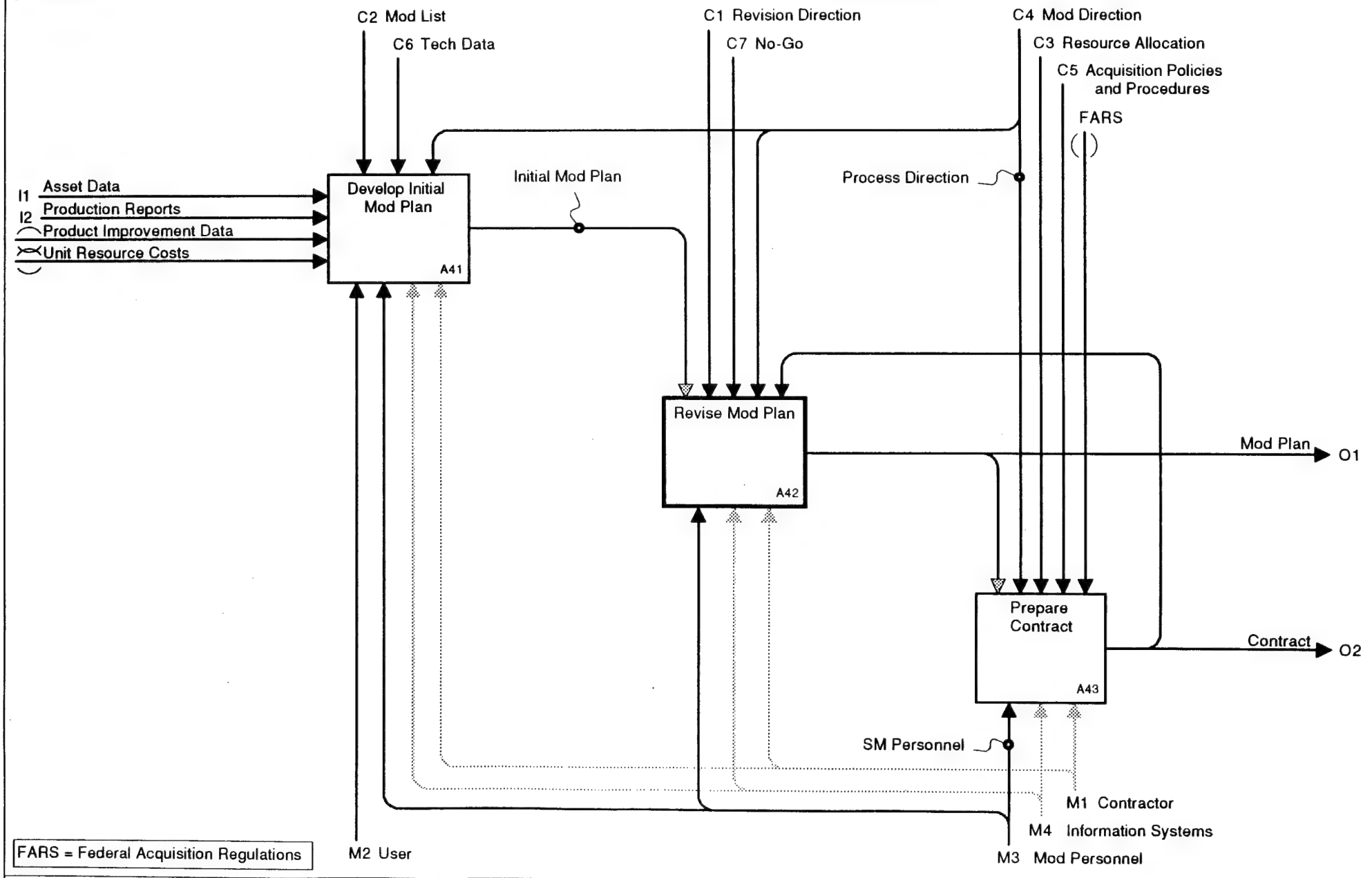

NODE:	A4	TITLE:	Plan Mod	VERSION:	1

KIT: 5	AUTHOR: Mod IDEF Working Group PROJECT: Mod Process Analysis MODEL: Mod Process As-Is DATE: 09/01/95 NOTES: 1 2 3 4 5 6 7 8 9 10		WORKING	READER DATE	CONTEXT:
		X	DRAFT		
			RECOMMENDED		
			PUBLICATION		

Diagram Story

This diagram consists of the four activities that produce the elements of the INITAL MOD PLAN. The ENGINEERING SOLUTION, ESTIMATED COST, and SCHEDULE are generated by their respective activities, and an associated risk is assessed for each. The development of the INITIAL MOD PLAN is undertaken by SINGLE MANAGER PERSONNEL with the assistance of USER STAFF in defining the ENGINEERING SOLUTION and costing the MOD.

Assumptions, Notes, and Issues

Opportunities

NODE: A41T	TITLE: Develop Initial Mod Plan	VERSION: 1

KIT:					
5	AUTHOR: Mod IDEF Working Group PROJECT: Mod Process Analysis MODEL: Mod Process As-Is DATE: 09/01/95 NOTES: 1 2 3 4 5 6 7 8 9 10		WORKING	READER DATE	CONTEXT:
		X	DRAFT		
			RECOMMENDED		
			PUBLICATION		

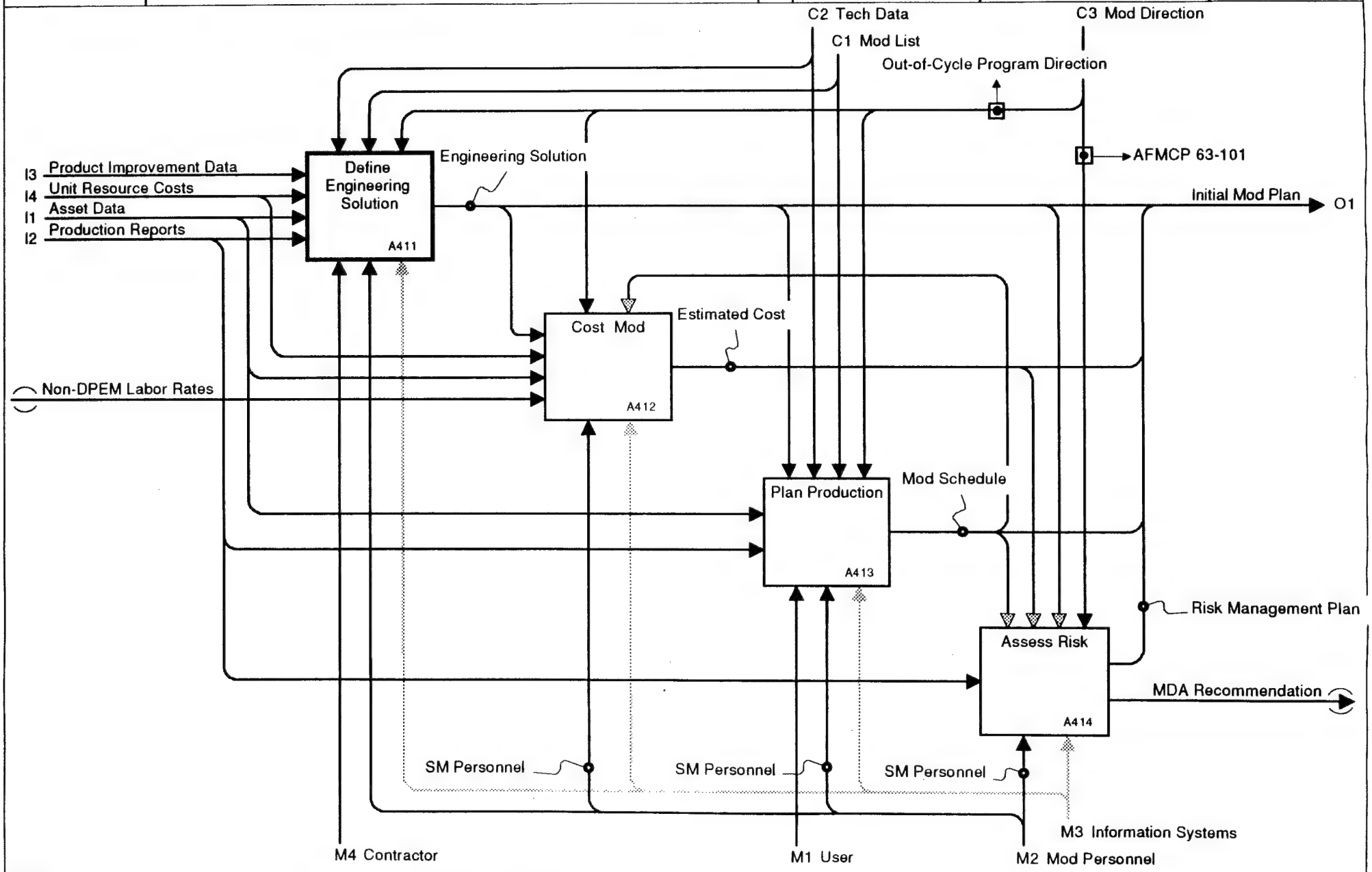

NODE: A41	TITLE: Develop Initial Mod Plan	VERSION: 1

KIT:	AUTHOR:					WORKING	READER	DATE	CONTEXT:
5	AUTHOR: Mod IDEF Working Group								
	PROJECT: Mod Process Analysis								
	MODEL: Mod Process As-Is			DATE: 09/01/95	X	DRAFT			
	NOTES: 1 2 3 4 5 6 7 8 9 10					RECOMMENDED			
						PUBLICATION			

Diagram Story

The cost for a MOD PROGRAM is estimated by projecting LABOR COSTS and MATERIAL COSTS over the SCHEDULE. These costs are identified as either recurring (variable) or nonrecurring (fixed) costs.

Assumptions, Notes, and Issues

MODS are costed out for 3010, 3080, and 3600 dollars.

Opportunities

Specific INFORMATION SYSTEMS must be developed and incorporated into the infrastructure of the processes modeled on this diagram.

NODE:	A412T	TITLE:	Cost Mod	VERSION:	1

KIT:	AUTHOR:	PROJECT:	MODEL:	NOTES:	DATE:		WORKING	READER	DATE	CONTEXT:
5	Mod IDEF Working Group	Mod Process Analysis	Mod Process As-Is	1 2 3 4 5 6 7 8 9 10	09/01/95	X	DRAFT			
							RECOMMENDED			
							PUBLICATION			

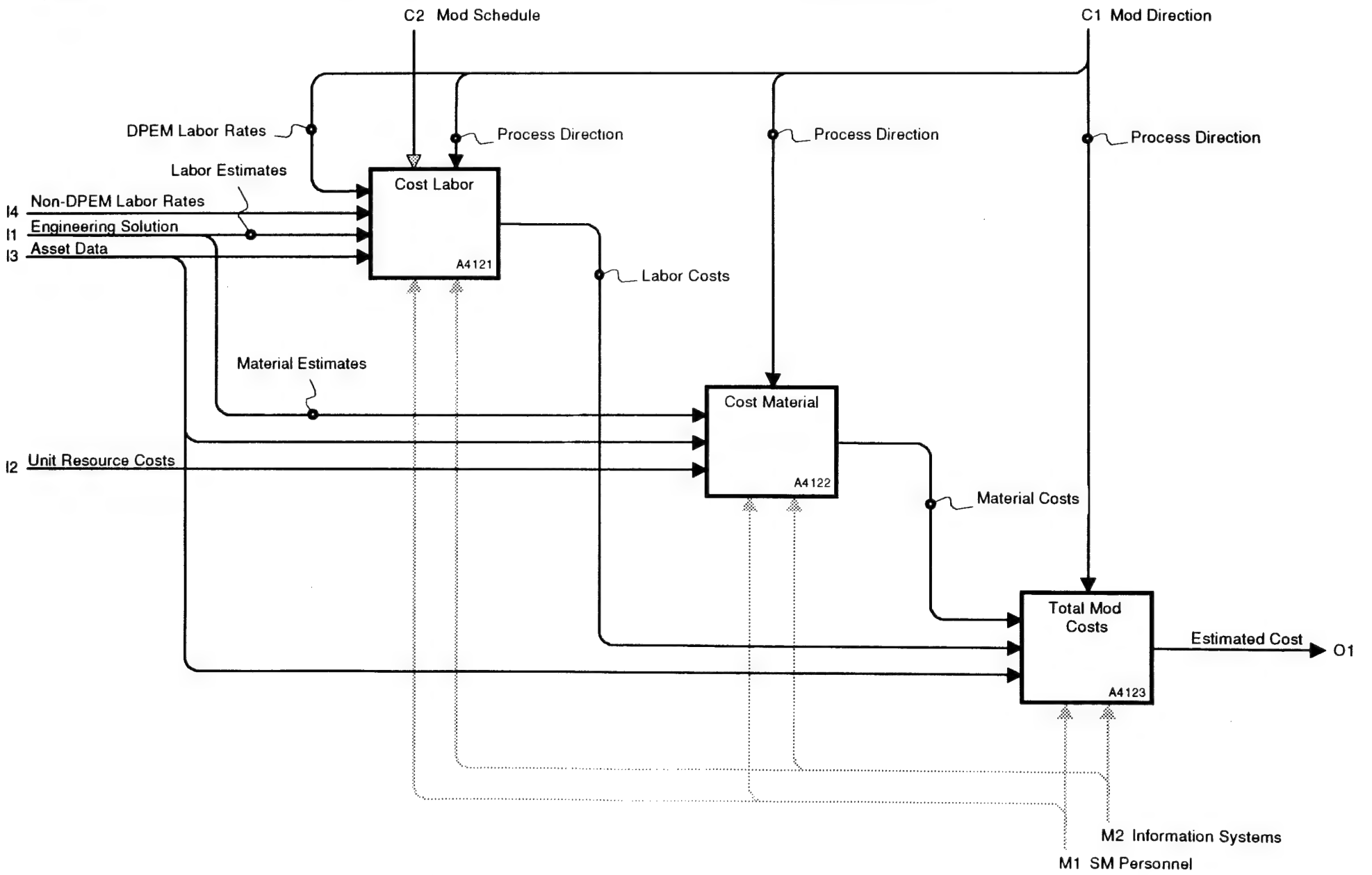

NODE:	A412	TITLE:	Cost Mod	VERSION:	1

KIT: 5	AUTHOR: Mod IDEF Working Group PROJECT: Mod Process Analysis MODEL: Mod Process As-Is DATE: 09/01/95 NOTES: 1 2 3 4 5 6 7 8 9 10		WORKING	READER	DATE	CONTEXT:
		X	DRAFT			
			RECOMMENDED			
			PUBLICATION			

Diagram Story

SM PERSONNEL PLAN PRODUCTION for a MODIFICATION by first identifying its priority with respect to other maintenance requirements. The SCOPE OF EFFORT and ASSET AVAILABILITY DATA will help IDENTIFY OPPORTUNITIES TO COMBINE MODS and prepare the KIT DELIVERY SCHEDULE. ASSET AVAILABILITY DATA and the KIT DELIVERY SCHEDULE drive the development of the MOD SCHEDULE.

Assumptions, Notes, and Issues

Opportunities

Specific INFORMATION SYSTEMS must be developed for the activities IDENTIFY SM MOD PRIORITY, DETERMINE SCOPE OF EFFORT, DETERMINE ASSET AVAILABILITY, and IDENTIFY KIT DELIVERY SCHEDULE.

NODE: A413T	TITLE: Plan Production	VERSION: 1

| KIT: | AUTHOR: | | |

KIT: 5	AUTHOR: Mod IDEF Working Group PROJECT: Mod Process Analysis MODEL: Mod Process As-Is DATE: 09/01/95 NOTES: 1 2 3 4 5 6 7 8 9 10		WORKING	READER	DATE	CONTEXT:
		X	DRAFT			
			RECOMMENDED			
			PUBLICATION			

Diagram Story

In assessing risk, SM PERSONNEL identify and EVALUATE RISK AREAS associated with the MOD SCHEDULE, ENGINEERING SOLUTION, AND ESTIMATED COST in order to develop a RISK MANAGEMENT PLAN. Based upon the established RISK AREAS, as outlined in the RISK MANAGEMENT PLAN, an MDA RECOMMENDATION is made.

Assumptions, Notes, and Issues

Opportunities

Specific INFORMATION SYSTEMS must be developed and incorporated into the infrastructure of the processes modeled on this diagram.

NODE: A414T	TITLE: Assess Risk	VERSION: 1

KIT:	AUTHOR:	Mod IDEF Working Group				CONTEXT:
5	PROJECT:	Mod Process Analysis		WORKING	READER DATE	
	MODEL:	Mod Process As-Is	X	DRAFT		
	NOTES: 1 2 3 4 5 6 7 8 9 10	DATE: 09/01/95		RECOMMENDED		
				PUBLICATION		

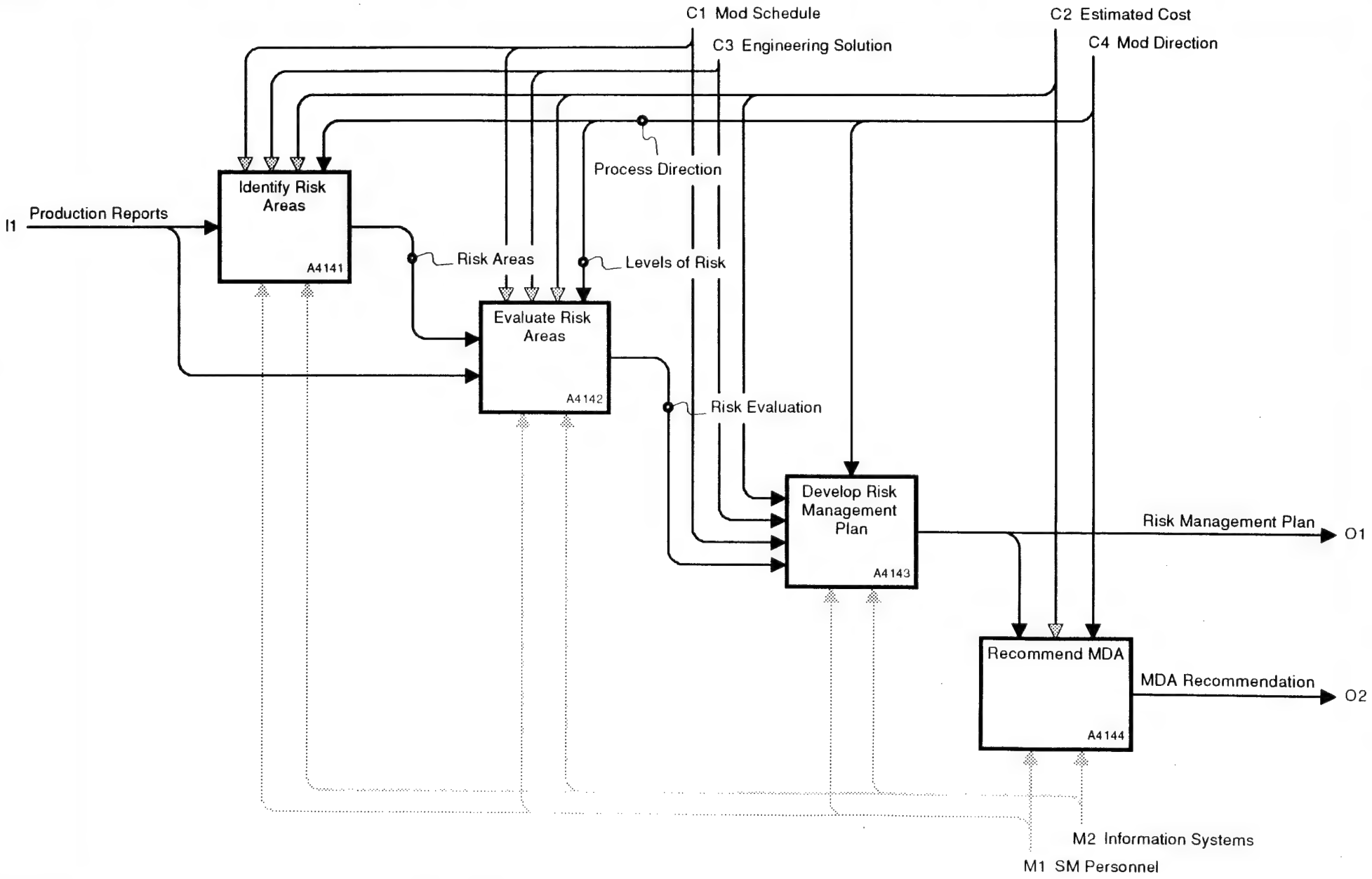

NODE:	A414	TITLE:	Assess Risk	VERSION:	1

KIT:	AUTHOR:	DATE:		WORKING	READER	DATE	CONTEXT:
5	Mod IDEF Working Group						
	PROJECT: Mod Process Analysis		X	DRAFT			
	MODEL: Mod Process As-Is	09/01/95		RECOMMENDED			
	NOTES: 1 2 3 4 5 6 7 8 9 10			PUBLICATION			

Diagram Story

In order to prepare a CONTRACT for a MOD, it is first determined whether a DOD or non-DOD organization will alter the ASSET. If the services of a non-DOD CONTRACTOR must be solicited, SINGLE MANAGER PERSONNEL develop a REQUEST FOR PROPOSAL. The SOURCE SELECTION TEAM prepares the SOURCE SELECTION PLAN, which forms the basis for reviewing PROPOSALS and selecting a CONTRACTOR. Once a CONTRACTOR has been selected and the MOD has been funded the CONTRACT is negotiated.

Assumptions, Notes, and Issues

Opportunities

Specific INFORMATION SYSTEMS must be developed and incorporated into the infrastructure of the processes modeled on this diagram.

NODE:	A43T	TITLE:	Prepare Contract	VERSION:	1

KIT:					
5	AUTHOR: Mod IDEF Working Group PROJECT: Mod Process Analysis MODEL: Mod Process As-Is DATE: 09/01/95 NOTES: 1 2 3 4 5 6 7 8 9 10		WORKING	READER DATE	CONTEXT:
		X	DRAFT		
			RECOMMENDED		
			PUBLICATION		

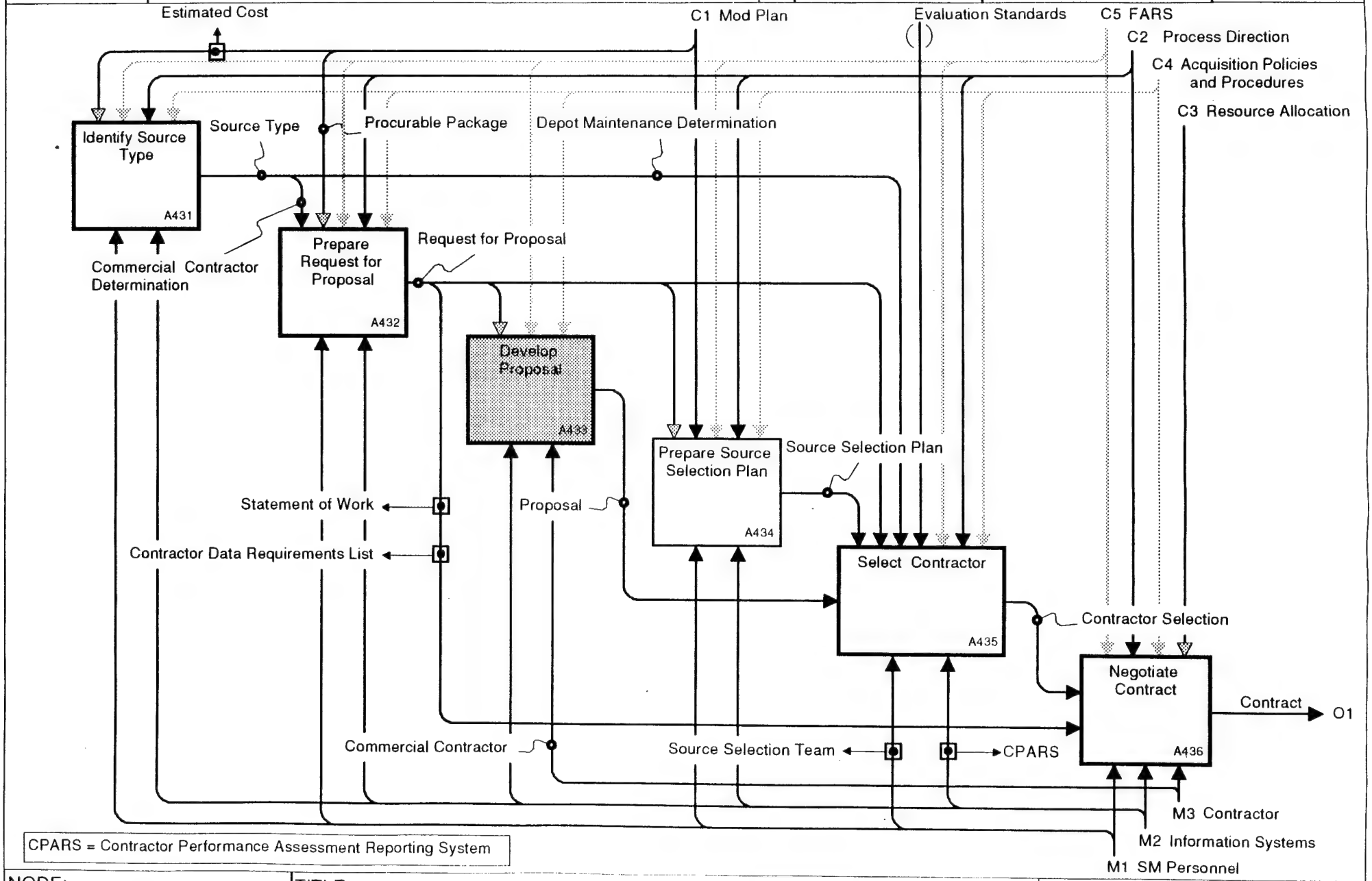

NODE: A43	TITLE: Prepare Contract	VERSION: 1

KIT: 5	AUTHOR: Mod IDEF Working Group PROJECT: Mod Process Analysis MODEL: Mod Process As-Is DATE: 09/01/95 NOTES: 1 2 3 4 5 6 7 8 9 10		WORKING	READER DATE	CONTEXT:
		X	DRAFT		
			RECOMMENDED		
			PUBLICATION		

Diagram Story

The key components of a SOURCE SELECTION PLAN are the SOURCE SELECTION STRATEGY, which identifies the approach used to select the source of repair, and the EVALUATION CRITERIA, which consist of measures for evaluating each offerer's proposal. In addition, the SOURCE SELECTION PLAN identifies the responsible organization, describes the duties of the SOURCE SELECTION TEAM, and details procedures for proposal evaluation.

Assumptions, Notes, and Issues

Opportunities

Specific INFORMATION SYSTEMS must be developed and incorporated into the infrastructure of the processes modeled on this diagram.

NODE: A434T	TITLE: Prepare Source Selection Plan	VERSION: 1

KIT:	AUTHOR:	Mod IDEF Working Group		WORKING	READER	DATE	CONTEXT:
5	PROJECT:	Mod Process Analysis	X	DRAFT			
	MODEL:	Mod Process As-Is	DATE: 09/01/95	RECOMMENDED			
	NOTES: 1 2 3 4 5 6 7 8 9 10			PUBLICATION			

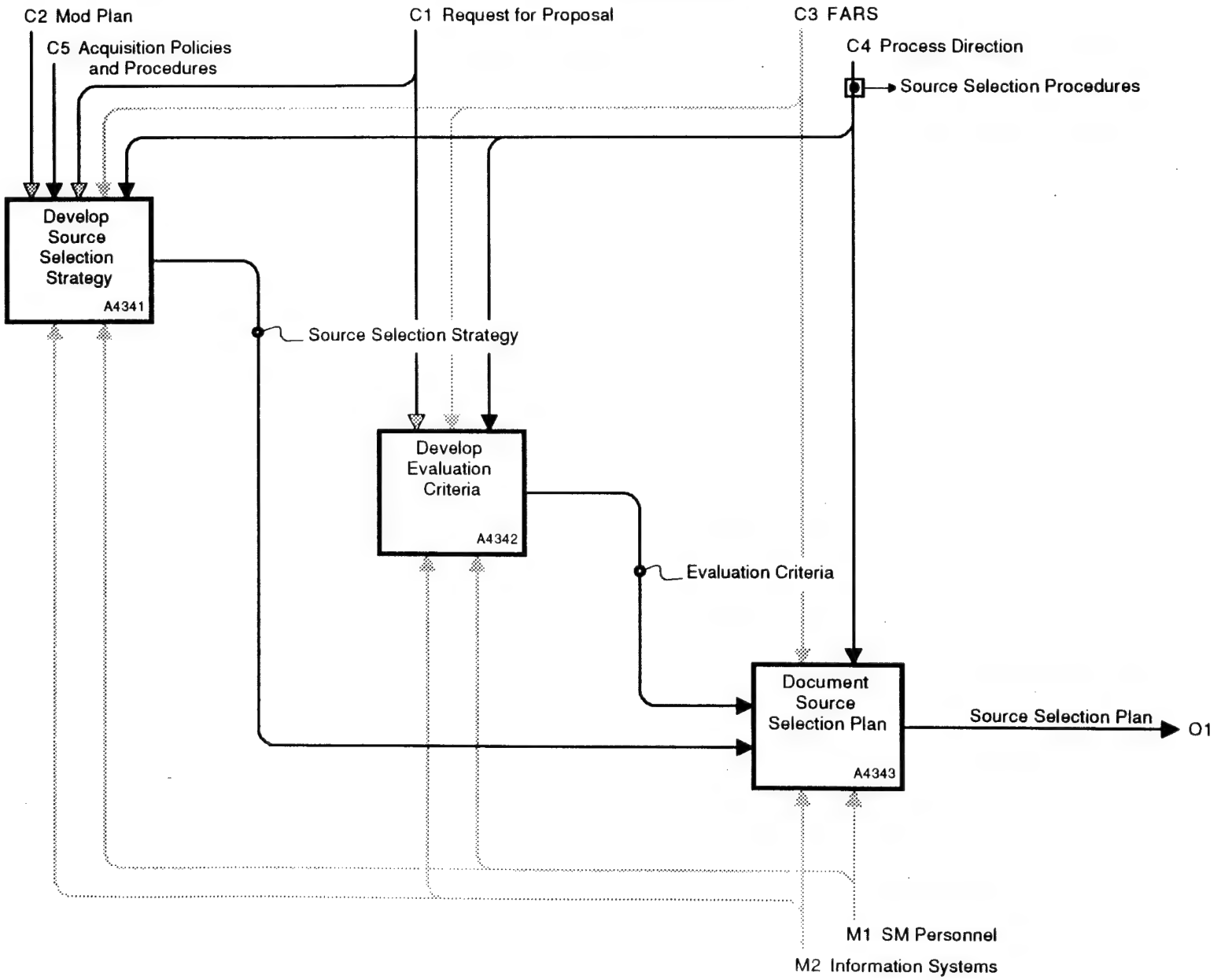

NODE:	A434	TITLE:	Prepare Source Selection Plan	VERSION:	1

KIT:	AUTHOR:	DATE:		WORKING	READER	DATE	CONTEXT:
5	PROJECT: Mod Process Analysis		X	DRAFT			
	MODEL: Mod Process As-Is	09/01/95		RECOMMENDED			
	NOTES: 1 2 3 4 5 6 7 8 9 10			PUBLICATION			

Diagram Story

Once a MOD PLAN has been developed and approved, a trial KIT is developed. This trial KIT is installed and tested in the activity DEVELOP KIT. The resulting PROOFED KIT is the basis for manufacturing KITS to MODIFY ASSETS. TECH DATA is updated when the trial KIT is developed and throughout the full-scale production of KITS. The activity SCHEDULE ASSET MODIFICATION prepares an INSTALL SCHEDULE in accordance with the MOD PLAN. The INSTALL SCHEDULE, along with RESOURCE ALLOCATION and INSTALLATION INSTRUCTIONS developed during kit proofing, directs the MODIFICATION of an ASSET.

Assumptions, Notes, and Issues

Opportunities

Specific INFORMATION SYSTEMS must be developed for the activities DEVELOP KIT and SCHEDULE ASSET MODIFICATION.

PROCESS DIRECTION must be developed for the activities DEVELOP KIT, SCHEDULE ASSET MODIFICATION, and MODIFY ASSET.

NODE:	A5T	TITLE:	Alter Asset	VERSION:	1

KIT:	AUTHOR:	Mod IDEF Working Group		WORKING	READER	DATE	CONTEXT:
5	PROJECT:	Mod Process Analysis	X	DRAFT			
	MODEL:	Mod Process As-Is	DATE: 09/01/95	RECOMMENDED			
	NOTES: 1 2 3 4 5 6 7 8 9 10			PUBLICATION			

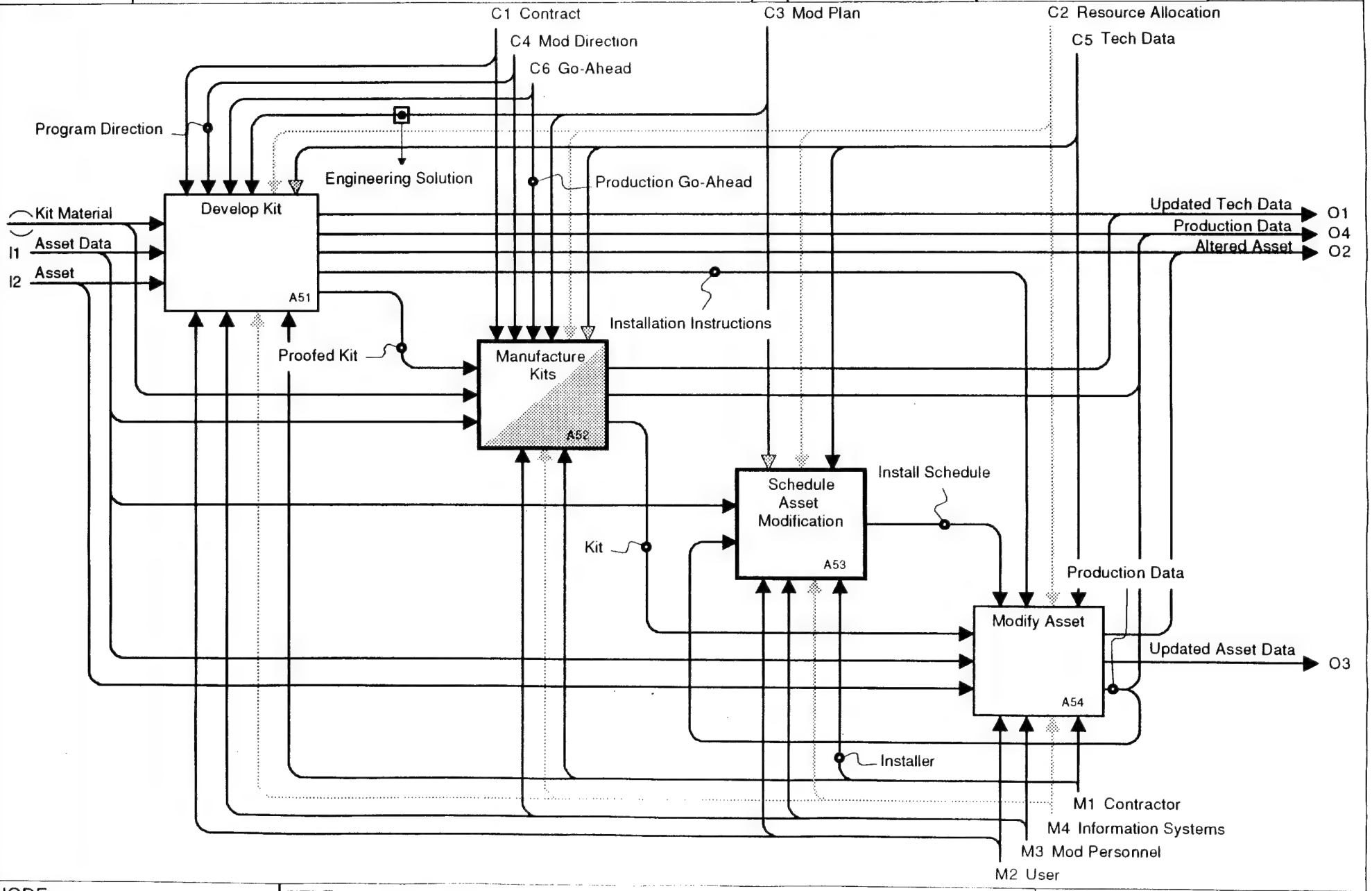

NODE:	A5	TITLE:	Alter Asset	VERSION:	1

KIT:	AUTHOR:			WORKING	READER DATE	CONTEXT:
5	PROJECT: Mod Process Analysis		X	DRAFT		
	MODEL: Mod Process As-Is	DATE: 09/01/95		RECOMMENDED		
	NOTES: 1 2 3 4 5 6 7 8 9 10			PUBLICATION		

Diagram Story

Using the ENGINEERING SOLUTION developed in the MOD PLAN, CONTRACTOR ENGINEERS design the kit for the MODIFICATION. This kit must undergo a trial installation and kit proofing before it is approved for full-scale production. If it fails either of these tests, a new kit design must be developed and tested.

Assumptions, Notes, and Issues

Opportunities

Specific INFORMATION SYSTEMS must be developed and incorporated into the infrastructure of the processes modeled on this diagram.

NODE:	A51T	TITLE:	Develop Kit	VERSION:	1

KIT:	AUTHOR:	Mod IDEF Working Group		WORKING	READER	DATE	CONTEXT:
5	PROJECT:	Mod Process Analysis	X	DRAFT			
	MODEL:	Mod Process As-Is	DATE: 09/01/95	RECOMMENDED			
	NOTES: 1 2 3 4 5 6 7 8 9 10			PUBLICATION			

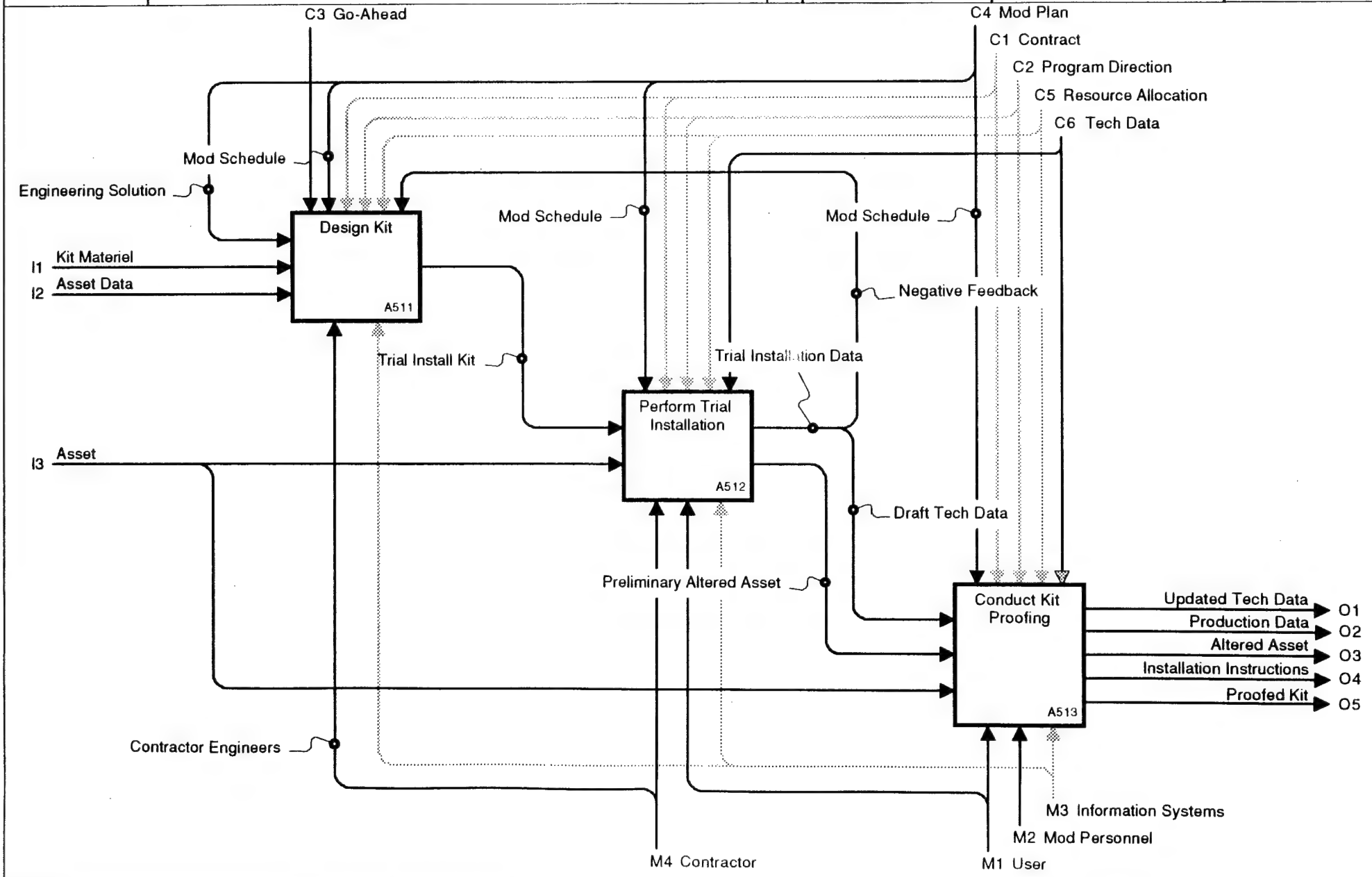

NODE:	A51	TITLE:	Develop Kit	VERSION:	1

KIT:	AUTHOR:				WORKING	READER	DATE	CONTEXT:
5	PROJECT:	Mod IDEF Working Group Mod Process Analysis		X	DRAFT			
	MODEL:	Mod Process As-Is	DATE: 09/01/95		RECOMMENDED			
	NOTES: 1 2 3 4 5 6 7 8 9 10				PUBLICATION			

Diagram Story

Once the KIT has been manufactured, the ASSET is inducted and prepared for the installation of the KIT. A functional check must be performed on each MODIFIED ASSET before it is returned to the USER . Each of these activities generates PRODUCTION DATA which is used to MONITOR PERFORMANCE and prepare PRODUCTION REPORTS..

Assumptions, Notes, and Issues

Opportunities

NODE:	A54T	TITLE:	Modify Asset	VERSION:	1

KIT: 5	AUTHOR: Mod IDEF Working Group PROJECT: Mod Process Analysis MODEL: Mod Process As-Is DATE: 09/01/95 NOTES: 1 2 3 4 5 6 7 8 9 10		WORKING	READER DATE	CONTEXT:
		X	DRAFT		
			RECOMMENDED		
			PUBLICATION		

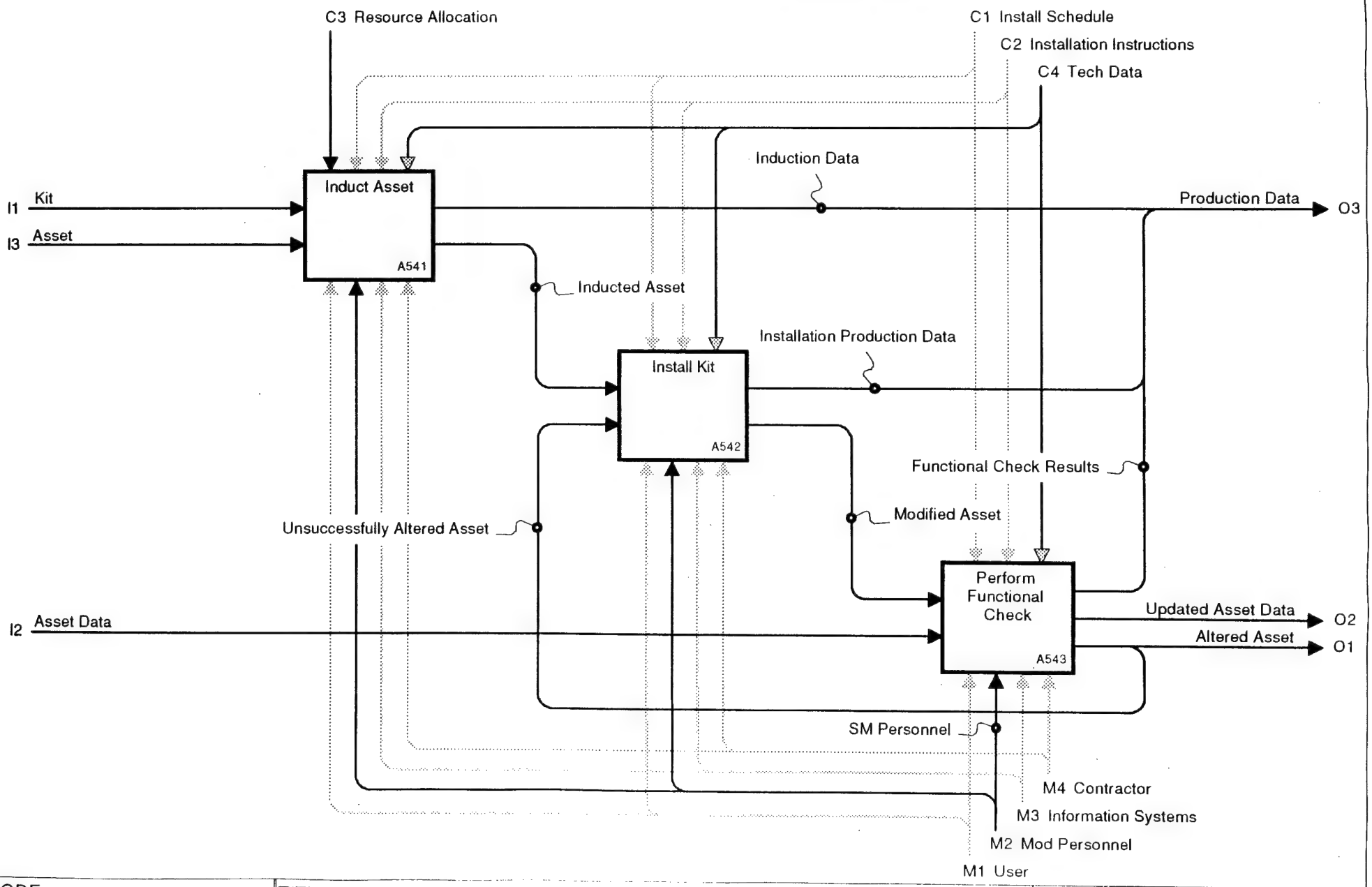

NODE: A54	TITLE: Modify Asset	VERSION: 1

KIT: 5	AUTHOR: Mod IDEF Working Group PROJECT: Mod Process Analysis MODEL: Mod Process As-Is DATE: 09/01/95 NOTES: 1 2 3 4 5 6 7 8 9 10		WORKING	READER DATE	CONTEXT:
		X	DRAFT		
			RECOMMENDED		
			PUBLICATION		

Diagram Story

PRODUCTION DATA generated during the MODIFICATION of an ASSET is used by SINGLE MANAGER PERSONNEL in the activity REVIEW PRODUCTION to make GO-AHEAD and NO-GO decisions regarding the continuation of a MOD. When a MOD is completed a COMPLIANCE NOTIFICATION is sent to the USER of the ASSET. SINGLE MANAGER PERSONNEL prepare PRODUCTION REPORTS on the status of a MOD, and use them to identify PERFORMANCE DISCREPANCIES with respect to the SM MDA USER STAFF AGREEMENT. PERFORMANCE DISCREPANCIES are included in PERFORMANCE REPORTS which MOD STAFF consider in issuing PROGRAM MANAGEMENT DIRECTIVEs for the MOD.

Assumptions, Notes, and Issues

Opportunities

NODE: A6T	TITLE: Monitor Performance	VERSION: 1

KIT: 5	AUTHOR: Mod IDEF Working Group PROJECT: Mod Process Analysis MODEL: Mod Process As-Is NOTES: 1 2 3 4 5 6 7 8 9 10	DATE: 09/01/95		WORKING	READER	DATE	CONTEXT:
			X	DRAFT			
				RECOMMENDED			
				PUBLICATION			

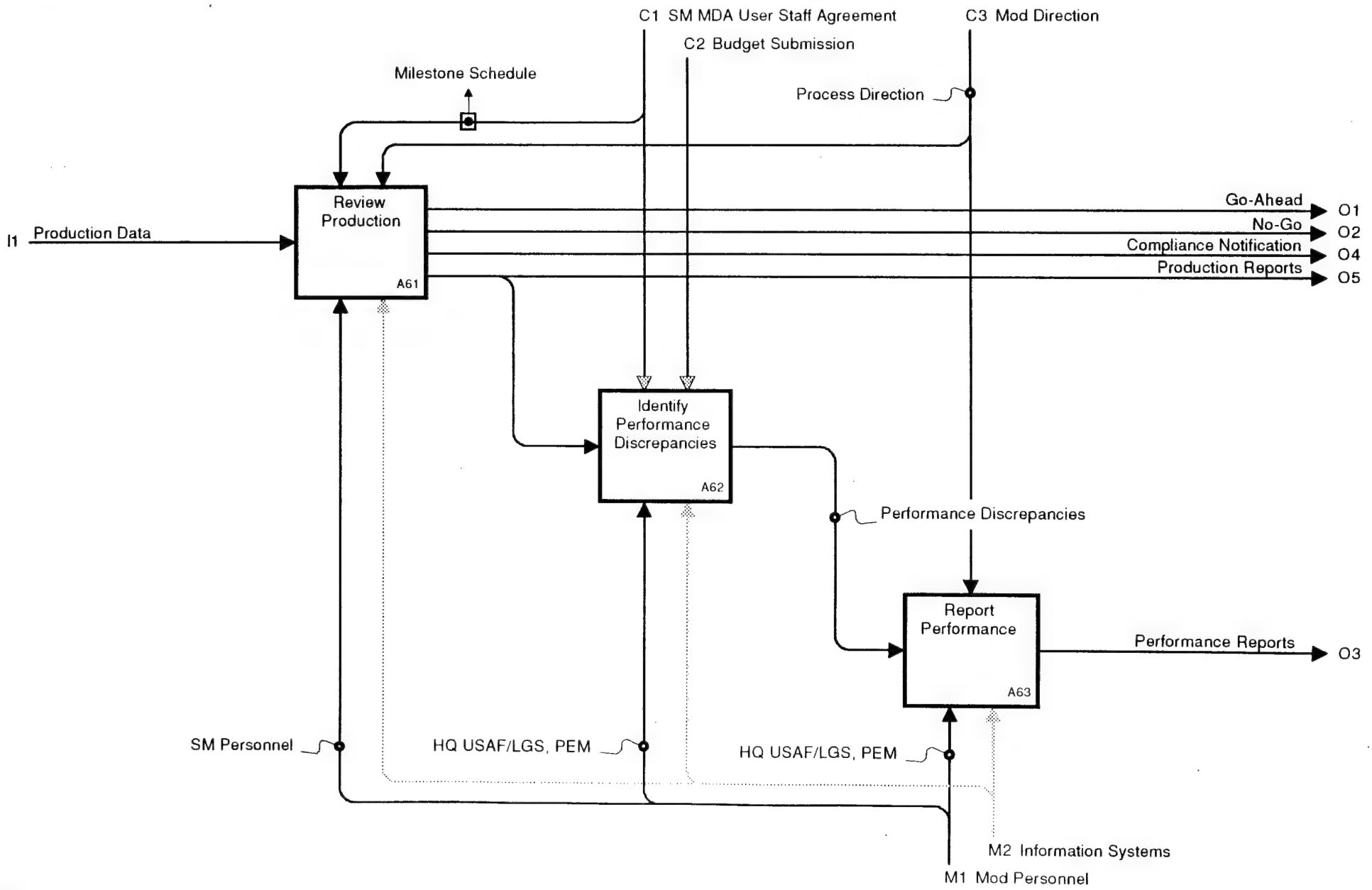

NODE: A6	TITLE: Monitor Performance	VERSION: 1

KIT: 5	AUTHOR: Mod IDEF Working Group PROJECT: Mod Process Analysis MODEL: Mod Process As-Is DATE: 09/01/95 NOTES: 1 2 3 4 5 6 7 8 9 10	X	WORKING	READER DATE	CONTEXT:
			DRAFT		Top
			RECOMMENDED		
			PUBLICATION		

Diagram Story

This diagram details the purpose of performing MODIFICATIONS and the relative frequency with which they are performed for various reasons. A MODIFICATION may be performed for any and/or all of these reasons. In summary, MODIFICATIONS may be performed to change form, fit, or function, or to correct a deficiency, with the usual intent to improve capability.

NODE: FEO-1T	TITLE: The Purpose of a Modification	VERSION: 1

Modifications are performed to:

	Almost Always	Sometimes
Change Form		X
Change Fit		X
Change Function		X
Improve Capability	X	
Correct Deficiency		X

KIT: 5	AUTHOR: Mod IDEF Working Group PROJECT: Mod Process Analysis MODEL: Mod Process As-Is DATE: 09/01/95 NOTES: 1 2 3 4 5 6 7 8 9 10	X	WORKING	READER DATE	CONTEXT:
			DRAFT		Top
			RECOMMENDED		
			PUBLICATION		

Diagram Story

This diagram shows the relation of mechanisms in the AS-IS model to the organizational structure of the Air Force. The grayed boxes, which are labeled in italics, represent this structure. MOD PERSONNEL are all organic personnel involved in the MOD PROCESS, regardless of their role in other AF activities. MOD PERSONNEL consists primarily of SINGLE MANAGER PERSONNEL, MOD STAFF, and USER STAFF. The USER is a representative of the MAJCOM in the MOD PROCESS, but is not included in MOD PERSONNEL. The CONTRACTOR selected to perform the MODIFICATION of an ASSET may be either commercial or Depot Maintenance.

Definintions:

MOD PERSONNEL - All organic personnel involved in the MOD PROCESS.
SINGLE MANAGER PERSONNEL - The SINGLE MANAGER and his/her support staff.
MOD STAFF - MOD PERSONNEL at HQ.
USER STAFF - The organization requesting a MODIFICATION; generally a LEAD COMMAND.
USER - The weapon system operator.
CONTRACTOR - The organization that performs the MODIFICATION of an ASSET and/or provides suppliesfor a MODIFICATION.

NODE: FEO-2T	TITLE: Explanation of Mechanisms in Model	VERSION: 1

KIT: 5	AUTHOR: Mod IDEF Working Group PROJECT: Mod Process Analysis MODEL: Mod Process As-Is DATE: 09/01/95 NOTES: 1 2 3 4 5 6 7 8 9 10	X	WORKING	READER DATE	CONTEXT: Top
			DRAFT		
			RECOMMENDED		
			PUBLICATION		

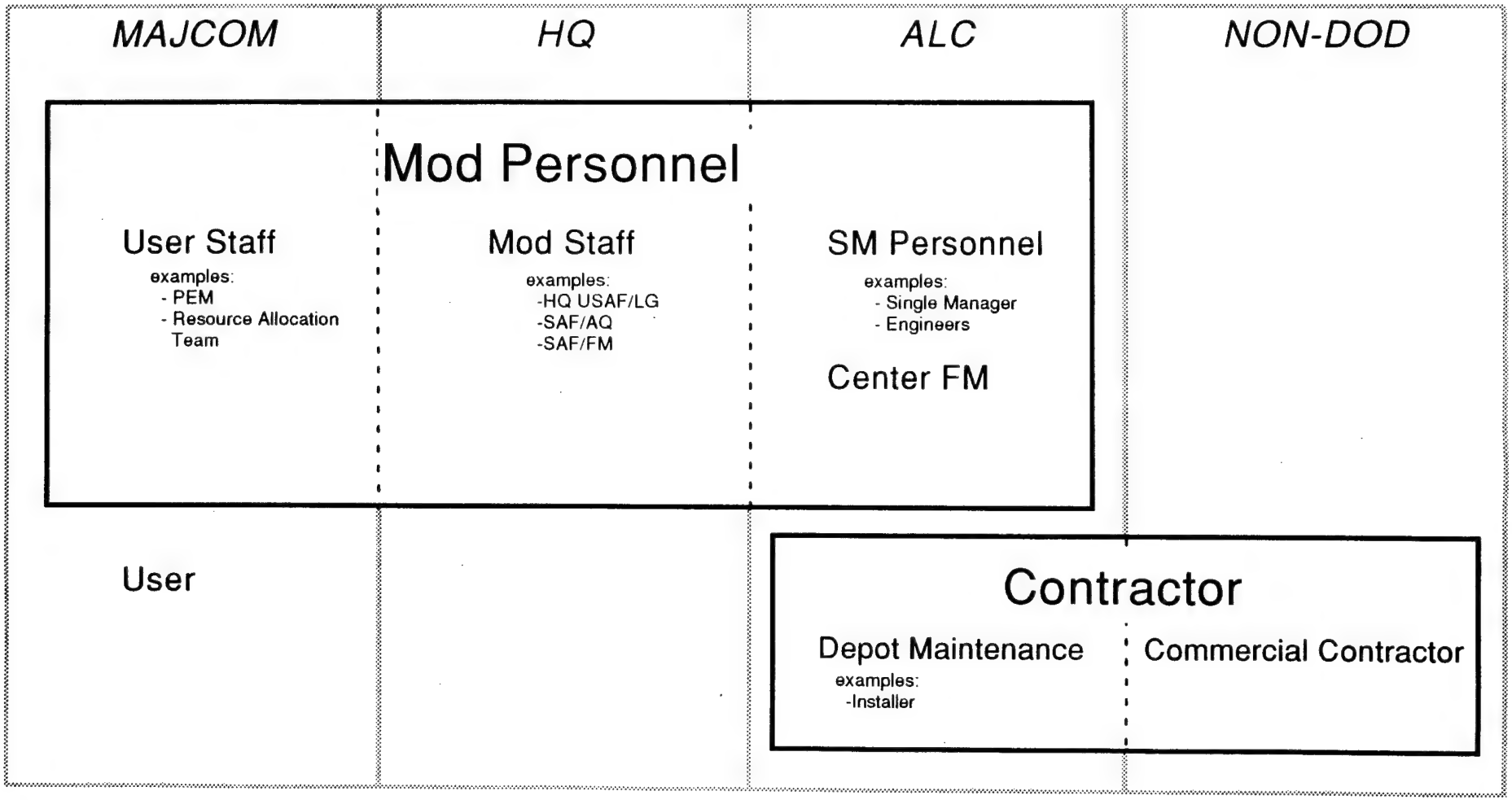

NODE: FEO-2	TITLE: Explanation of Mechanisms in Model	VERSION: 1

PROJECT: MOD Process Analysis
MODEL: MOD Process AS-IS
TEAM: Synergy MOD Team
KIT: 1
DATE: September 11, 1995

GLOSSARY NOTES

CAPITALIZED TERMS refer to terms that are defined in the glossary.

*(ICOM)*indicates that the glossary definition is either an Input, Control, Output, or Mechanism arrow label.

*(ACRONYM)*indicates that the term is an acronym commonly used by the MOD IDEF Working Group.

(ACTIVITY ...) indicates that the term is the name of an Activity on a IDEF0 Diagram.

(ANNOTATION) indicates that the term is an annotation.

(ENTITY) indicates that the term appears on a model diagram as an A-1 environment diagram entity.

(CONSTITUENT TERM) indicates that the glossary definition does not appear on any IDEF0 Diagrams, but is provided as a reference term for other glossary definitions.

[Ref: ...] inidicates the source reference for the glossary definition. If there is no [Ref: ...] after a glossary definition, that means that the definition was defined by the MOD IDEF Working Group and therefore is agreed upon as the official definition of that term.

NOTE: A box, shown as:☐, placed before a glossary term, indicates terms that are either undefined by Synergy, or defined by a Team member. These definitions, or lack there of, have not been agreed upon by the MOD IDEF Working Team. Therefore, in reviewing the glossary, please pay close attention to those terms. If you agree with the definition we have for that term please place a check mark in the associated box.

ABIDES *(ICOM)*

[Ref:]

ACQUISITION DECISION *(ICOM)*

An ACQUISITION DECISION is a decision by the MDA to precede to the next milestone in the progress of a MOD. This decision may be communicated verbally or in writing as an ACQUISITION DECISION MEMORANDUM. [Ref: MPWG]

ACQUISITION DECISION MEMORANDUM *(CONSTITUENT TERM)*

An ACQUISITION DECISION MEMORANDUM is a document that communicates a milestone decision, including exit criteria. It is typically used for ACAT I programs. [Ref: MPWG]

ACQUISITION POLICIES AND PROCEDURES *(ICOM)*

ACQUISITION POLICIES AND PROCEDURES are directions and instructions from the SECDEF on conducting acquisition programs. This includes DOD 5000 and 8000 series publications and SECDEF memos. [Ref:]

ACQUISITION PROGRAM BASELINE *(CONSTITUENT TERM)*

An ACQUISITION PROGRAM BASELINE (APB) is a baseline established by the DOD Components and approved by the MILESTONE DECISION AUTHORITY. The APB values for cost, schedule, and performance characteristics will be included as Approved Program values (in Selected Acquisition Report sections 9, 10, and 11) in all quarterly and annual Selected Acquisition Reports. [Ref: MPWG]

AF FORM 1067 *(ANNOTATION)*

An AF FORM 1067 is the documentation of a REQUIREMENT. It is initiated by a USER in response to maintenance difficulties, operational problems, or requirements for enhanced capabilities. [Ref: Synergy]

AF FORM 3525 *(CONSTITUENT TERM)*

AF FORM 3525 is an automated document of the Modification Management System (MMS) designed to carry information necessary for CCB analysis and MDA and HQ USAF approval of proposed permanent MODS. [Ref: Synergy]

AF MODIFICATION PROCESS DESCRIPTION (TEST) (*CONSTITUENT TERM*)

AF MODIFICATION PROCESS DESCRIPTION (TEST) is guidance detailing the requirements for submitting, budgeting, procuring, managing, and implementing a MODIFICATION program. [Ref: AF MODIFICATION PROCESS DESCRIPTION (TEST)]

AF REPROGRAMMING (*ICOM*)

AF REPROGRAMMING is out-of-cycle DIRECTION on the redistribution of funds between weapon systems. [Ref: MPWG]

AFMC/FMA (*ICOM*)

[Ref:]

AFMCP 63-101 (*ANNOTATION*)

[Ref:]

AFPD (*ACRONYM*)

AFPD is AF Policy Directive [Ref: AS IS]

ALTER ASSET (*ACTIVITY A5*)

The activity ALTER ASSET changes the configuration of an ASSET through manufacturing or maintenance activities. [Ref: Synergy]

ALTERED ASSET (*ICOM*)

An ALTERED ASSET is an ASSET that has had its configuration changed through the installation of a KIT and has successfully undergone a functional check. [Ref: Synergy]

APPROVE FUNDING (*ACTIVITY A3215*)

The activity APPROVE FUNDING verifies that the AVAILABLE FUNDING meets the FUNDING REQUIREMENTS in the form of a PROGRAM AUTHORITY. If REPROGRAMMED FUNDING still does not sufficiently cover the FUNDING REQUIREMENTS, a REJECTED PROGRAM AUTHORITY will restart the process ISSUE PROGRAM AUTHORITY. [Ref: MPWG]

APPROVE PROGRAM MANAGEMENT DIRECTIVE (*ACTIVITY A124*)

The activity APPROVE PROGRAM MANAGEMENT DIRECTIVE is the process of taking an unapproved PROGRAM MANAGEMENT DIRECTIVE and obtaining the authority signature. [Ref: MPWG]

ASSESS RISK (*ACTIVITY A414*)

The activity ASSESS RISK judges the technical, cost, and MOD SCHEDULE risk of a MOD based on the MOD PLAN. A more detailed risk assessment is developed for complex and costly MODS. [Ref: Synergy]

ASSET (*ICOM*)

An ASSET is a configured item or nonnuclear munition being transformed by a MODIFICATION. A configured item is an aggregation of hardware or software or any of its discrete portions that satisfies an end use function and is designated by the government for configuration management. [Ref: MPWG]

ASSET AVAILABILITY DATA (*ICOM*)

ASSET AVAILABILITY DATA identifies the number of ASSETS the USER is able to deliver at a specified time. [Ref: MPWG]

ASSET DATA (*ICOM*)

ASSET DATA is data on the USER'S total inventory of ASSETS. ASSET DATA includes repair history, inventory, location, condition status, MDS. [Ref: Synergy]

AVAILABLE FUNDING (*ICOM*)

[Ref:]

BPSS (*ICOM*)

BPSS is Budgeting Programming Support System. This INFORMATION SYSTEM is used by HQ USAF/LGS personnel to BUDGET RESOURCES and EXECUTE RESOURCES. [Ref: MPWG]

BREACH REPORTS (*ANNOTATION*)

BREACH REPORTS document when a MOD fails to meet the thresholds of the key parameters identified in the SM MDA AGREEMENT. [Ref: MPWG]

BUDGET AUTHORITY (*ICOM*)

BUDGET AUTHORITY (BA) provides authority to obligate funds for a program. SAF/FMBIA issues BA for each fiscal year increment (or the entire FY program) when it releases funds against the approved program or reprogramming action. [Ref: MPWG]

BUDGET RESOURCES (*ACTIVITY A31*)

The activity BUDGET RESOURCES ensures that the cost and MOD SCHEDULE, as planned by SM PERSONNEL, is financially executable. [Ref: MPWG]

BUDGET SUBMISSION (*ICOM*)

A BUDGET SUBMISSION is a proposed multi-year financial operating plan for a MODIFICATION based upon a forecasted level of activity that quantifies the resources needed to accomplish that activity and the revenue to be received from the USER. Examples of BUDGET SUBMISSIONS include the Presidential Objective Memorandum, the Budget Estimate Submission, and the President's Budget. [Ref: Synergy]

CENTER FM (*ICOM*)

[Ref:]

COMBAT MISSION NEED STATEMENT (*ICOM*)

The COMBAT MISSION NEED STATEMENT is an immediate, unprogrammed requirement for a MOD due to a military crisis situation. [Ref: MPWG]

COMMERCIAL CONTRACTOR (*ICOM*)

[Ref:]

COMMERCIAL CONTRACTOR DETERMINATION (*ICOM*)

A COMMERCIAL CONTRACTOR DETERMINATION is the decision by SM PERSONNEL that the CONTRACTOR will be a commercial organization. [Ref: Synergy]

COMPLIANCE NOTIFICATION (*ICOM*)

A COMPLIANCE NOTIFICATION notifies the USER at various intervals on the progress of their MOD. [Ref: MPWG]

COMPTROLLER DIRECTION (*ICOM*)

COMPTROLLER DIRECTION consists of Budget Decisions, Program Budget Decisions, Appropriation Information, Performance Reporting Guidance, PPBS Guidance, and regulation DODI 5000.2, Defense Acquisition Management Policies and Procedures. [Ref: Synergy]

CONDUCT FEASIBILITY STUDIES *(ACTIVITY A22)*

The activity CONDUCT FEASIBILITY STUDIES is the identification of the cost and risk associated with each MOD SOLUTION ALTERNATIVE. [Ref: MPWG]

CONDUCT KIT PROOFING *(ACTIVITY A513)*

The activity CONDUCT KIT PROOFING ensures KIT requirements are met. These requirements are: 1) all parts must fit properly except "assemble for force fit", 2) all special tooling and test equipment must do the job, 3) installation instructions and related drawings must do the job intended, 4) parts in TCTO must agree with actual items in the kit and any part substitution shall require issuance of a TCTO supplement, 5) disposition instructions must be clearly defined and acceptable for removal of items, 6) the ALTERED ASSET must perform the prescribed criteria, 7) TCTO must clearly describe the impact of change, 8) man-hours to accomplish TCTO must be accurate and identified by function, 9) changes to software must be compatible with modified equipment, and 10) corrective action will be incorporated prior to release of TCTO. [Ref: Abridged AFAM Library]

CONDUCT PROGRAM MANAGEMENT REVIEW *(ACTIVITY A1221)*

The activity CONDUCT PROGRAM MANAGEMENT REVIEW is the review and evaluation of the progress of the MOD. Discussions should include configuration, performance, contracting/production schedule, tech data, training programs and hardware, construction status, etc. [Ref: MPWG]

CONGRESS *(ENTITY)*

CONGRESS is self-explanatory. [Ref: Synergy]

CONGRESSIONAL APPROPRIATION *(ICOM)*

A CONGRESSIONAL APPROPRIATION is an authorization, in the form of dollars, that must be used for designated purposes. [Ref: MPWG]

CONGRESSIONAL DIRECTION *(ICOM)*

CONGRESSIONAL DIRECTION is DIRECTION from CONGRESS and its Congressional Committees. CONGRESSIONAL DIRECTION may be given to MOD PERSONNEL regarding a specific MOD and its appropriation. [Ref: Synergy]

CONTRACT (*ICOM*)

A CONTRACT is the agreement between the CONTRACTOR and SM PERSONNEL that states the time frame and the manner in which the CONTRACTOR is to accomplish their taskings. Besides specifying who the CONTRACTOR is, it also identifies the amount the CONTRACTOR will be paid for their services. [Ref: Synergy]

CONTRACTOR (*ICOM*)

A CONTRACTOR is a DEPOT MAINTENANCE or commercial organization that performs the MODIFICATION of an ASSET and/or provides supplies for the MODIFICATION. [Ref: MPWG]

CONTRACTOR DATA REQUIREMENTS LIST (*ANNOTATION*)

A CONTRACTOR DATA REQUIREMENTS LIST provides a single place in the CONTRACT for directing the CONTRACTOR on how to prepare and deliver data to the government. It is included in the REQUEST FOR PROPOSAL. [Ref: Abridged AFMC RFP Process Guide]

CONTRACTOR ENGINEERS (*ICOM*)

CONTRACTOR ENGINEERS are CONTRACTORS in the functional fields of scientific and technical matters; basic and applied research; research, development, test, and evaluation of weapon systems, and defense material; and design and engineering for suitability, producibility, reliability, maintainability, and material conservation. [Ref: Abridged AF Institute of Technology Compendium of Authenticated Systems and Logistics Terms]

CONTRACTOR SELECTION (*ICOM*)

CONTRACTOR SELECTION is the determination of which CONTRACTOR will alter the ASSET. [Ref: Synergy]

COST LABOR (*ACTIVITY A4121*)

The activity COST LABOR calculates fixed and variable LABOR COSTS. [Ref: MPWG]

COST MATERIAL (*ACTIVITY A4122*)

The activity COST MATERIAL calculates fixed and variable MATERIAL COSTS. [Ref: MPWG]

COST MOD (*ACTIVITY A412*)

The activity COST MOD estimates LABOR COSTS and MATERIAL COSTS for altering an ASSET. [Ref: Synergy]

CPARS (*ANNOTATION*)

CPARS is Contractor Performance Assessment Reporting System. It captures commercial CONTRACTORS past performance histories and feeds that information into the source selection process. Past performance is required to be one of the EVALUATION CRITERIA in source selection, and CPARS assessments capture objective data on how a contractor performed against contractual requirements. [Ref: MPWG]

DEFENSE PLANNING GUIDANCE (*ANNOTATION*)

[Ref:]

DEFINE ENGINEERING SOLUTION (*ACTIVITY A411*)

The activity DEFINE ENGINEERING SOLUTION applies scientific and engineering analysis to transform an operational need into system performance parameters, to develop a strategy to change system configuration, to integrate related technical parameters, and to ensure compatibility of all interfaces with a MOD. [Ref: Abridged AF MODIFICATION PROCESS DESCRIPTION (TEST)]

DEPOT MAINTENANCE (*CONSTITUENT*)

DEPOT MAINTENANCE is the DOD organization that modifies ASSETS. [Ref: MPWG]

DEPOT MAINTENANCE DETERMINATION (*ICOM*)

A DEPOT MAINTENANCE DETERMINATION is the decision by SM PERSONNEL that the CONTRACTOR will be a DOD organization. [Ref: Synergy]

DESIGN KIT (*ACTIVITY A511*)

The activity DESIGN KIT develops the engineering blueprint for the TRIAL INSTALL KIT. [Ref: MPWG]

DETERMINE ASSET AVAILABILITY (*ACTIVITY A4133*)

The activity DETERMINE ASSET AVAILABILITY identifies the number of ASSETS the USER is able to deliver at a specified time. [Ref: MPWG]

DETERMINE MOD SOLUTION (*ACTIVITY A2*)

The activity DETERMINE MOD SOLUTION transforms a REQUIREMENT into a detailed and costed REQUIREMENT. This REQUIREMENT is initially approved by the USER prior to submission to SM PERSONNEL. [Ref: Synergy]

DETERMINE OPTIMAL MATERIAL STRATEGY (*ACTIVITY A23*)

The activity DETERMINE OPTIMAL MATERIAL STRATEGY selects the strategy that will be adopted to address a USER'S REQUIREMENT. The need for a MODIFICATION is documented as a MOD SOLUTION, and the need for an alternative to a MOD is documented as a NON-MOD SOLUTION. When the POTENTIAL MATERIAL STRATEGIES are inadequate, an UNAPPROVED STRATEGY is sent back to the responsible ENGINEERS. [Ref: MPWG]

DETERMINE SCOPE OF EFFORT (*ACTIVITY A4132*)

The activity DETERMINE SCOPE OF EFFORT identifies the magnitude of resources required to implement a MOD. These resources include time, labor, material, and facilities. [Ref: MPWG]

DEVELOP ACQUISITION DECISION (*ACTIVITY A122*)

The activity DEVELOP ACQUISITION DECISION evaluates the activities and/or events necessary to complete an acquisition phase in order to reach a milestone decision. This decision may be communicated verbally or in writing as an ACQUISITION DECISION MEMORANDUM. [Ref: MPWG]

DEVELOP ENTRY/EXIT CRITERIA (*ACTIVITY A1223*)

The activity DEVELOP ENTRY/EXIT CRITERIA creates program specific measures which regulate entry and exit for the next milestone. [Ref: MPWG]

DEVELOP EVALUATION CRITERIA (*ACTIVITY A4342*)

The activity DEVELOP EVALUATION CRITERIA establishes measures for evaluating each offeror's PROPOSAL. [Ref:]

DEVELOP INITIAL MOD PLAN (*ACTIVITY A41*)

The activity DEVELOP INITIAL MOD PLAN documents the preliminary strategy for managing a MOD. [Ref: Synergy]

DEVELOP KIT *(ACTIVITY A51)*

The activity DEVELOP KIT includes all the activities required to design, test, and produce the first production KIT. [Ref: MPWG]

DEVELOP MOD DIRECTION *(ACTIVITY A1)*

The activity DEVELOP MOD DIRECTION interprets DIRECTION from CONGRESS, SECDEF, and the DOD COMPTROLLER for MOD PERSONNEL. The activity also generates DIRECTION on the MOD PROCESS and specifies when a specific MOD may proceed. [Ref: Synergy]

DEVELOP MOD SCHEDULE *(ACTIVITY A 4136)*

The activity DEVELOP MOD SCHEDULE creates a coordinated sequence of events to implement a MOD. This schedule is based on SM MOD PRIORITY, ASSET AVAILABILITY, and IDENTIFIED OPPORTUNITIES TO COMBINE MODS. [Ref: MPWG]

DEVELOP MOD SOLUTION ALTERNATIVES *(ACTIVITY A21)*

The activity DEVELOP MOD SOLUTION ALTERNATIVES identifies potential solutions to meet the USER's REQUIREMENTS. [Ref: MPWG]

DEVELOP OUT-OF-CYCLE PROGRAM DIRECTION *(ACTIVITY A121)*

The activity DEVELOP OUT-OF-CYCLE-PROGRAM DIRECTION prepares PROGRAM DIRECTION when requirements for a MOD are submitted and do not fall within the FYDP budget cycle. These often entail emergencies which will accelerate the speed at which a MOD is accomplished. [Ref: Synergy]

DEVELOP PROCESS DIRECTION *(ACTIVITY A11)*

The activity DEVELOP PROCESS DIRECTION interprets DIRECTION from CONGRESS, SECDEF, and the DOD COMPTROLLER, applies EXTERNAL RECOMMENDATIONS, analyzes EVENTS, and reviews PRODUCTION REPORTS to update or develop new PROCESS DIRECTION. [Ref: Synergy]

DEVELOP PROGRAM DIRECTION *(ACTIVITY A12)*

The activity DEVELOP PROGRAM DIRECTION generates program-specific DIRECTION which specifies the cost, MOD SCHEDULE, and performance results that must be achieved. [Ref: MPWG]

DEVELOP PROGRAM MANAGEMENT DIRECTIVE (*ACTIVITY A123*)

The activity DEVELOP PROGRAM MANAGEMENT DIRECTIVE prepares the DIRECTION for implementing and executing a program or activity, including directing the responsibilities of all involved organizations. [Ref: MPWG]

DEVELOP PROPOSAL (*ACTIVITY A433*)

The activity DEVELOP PROPOSAL generates a PROPOSAL for the SOURCE SELECTION TEAM'S consideration in selecting a CONTRACTOR. This activity is outside the scope of the model because it is undertaken by a COMMERCIAL CONTRACTOR. [Ref: Synergy]

DEVELOP RISK MANAGEMENT PLAN (*ACTIVITY A4143*)

The activity DEVELOP RISK MANAGMENT PLAN identifies the strategies necessary to minimize risk. [Ref: MPWG]

DEVELOP SOURCE SELECTION STRATEGY (*ACTIVITY A4341*)

The activity DEVELOP STRATEGY selects the approach used to identify a source. [Ref: MPWG]

DIRECTION (*CONSTITUENT TERM*)

DIRECTION informs DOD entities how and when they must accomplish an activity. [Ref: Synergy]

DISTRIBUTE FUNDS (*ACTIVITY A324*)

The activity DISTRIBUTE FUNDS issues RESOURCE ALLOCATION to SM PERSONNEL. This activity acts solely as a clearing house; no decisions are made. [Ref: MPWG]

DOCUMENT SOURCE SELECTION PLAN (*ACTIVITY A4343*)

The activity DOCUMENT SOURCE SELECTION PLAN defines how the source selection process will be organized and conducted. [Ref: MPWG]

DOD (*ACRONYM*)

DOD is Department of Defense. [Ref: Synergy]

DOD COMPTROLLER (*ENTITY*)

The DOD COMPTROLLER acts as chief financial manager for the armed services. The individual is responsible for PPBS and all budgetary matters. [Ref: Abridged AFSC Financial Management Handbook]

DPEM LABOR RATES (*ICOM*)

DPEM LABOR RATES identify the rate charged for DPEM manhours as dictated by OSD. [Ref: MPWG]

DRAFT TECH DATA (*ICOM*)

DRAFT TECH DATA is TECH DATA in draft format and is KIT specific. [Ref: MPWG]

ENGINEERING SOLUTION (*ICOM*)

An ENGINEERING SOLUTION is a documented strategy on how to change system configuration, to integrate related technical parameters, and to ensure compatibility of all interfaces with a MOD. [Ref: Synergy]

ENGINEERS (*ANNOTATION*)

ENGINEERS are MOD PERSONNEL in the functional fields of scientific and technical matters; basic and applied research; research, development, test, and evaluation of weapon systems, and defense material; and design and engineering for suitability, producibility, reliability, maintainability, and material conservation. [Ref: Abridged AF Institute of Technology Compendium of Authenticated Systems and Logistics Terms]

ENTRY/EXIT CRITERIA (*ICOM*)

ENTRY/EXIT CRITERIA are program specific measures the MDA uses to make an ACQUISITION DECISION. [Ref: MPWG]

ESTIMATED COST (*ICOM*)

An ESTIMATED COST is an estimate of the total cost for altering an ASSET. [Ref: Synergy]

EVALUATE CURRENT EXIT CRITERIA (*ACTIVITY A1222*)

The activity EVALUATE CURRENT EXIT CRITERIA compares the PROGRAM STATUS against exit criteria for the current milestone to determine whether or not the program is ready to proceed to the next milestone. [Ref: MPWG]

EVALUATE RISK AREAS (*ACTIVITY A4142*)

The activity EVALUATE RISK AREAS quantifies the various subjective parameters associated with RISK AREAS. [Ref: MPWG]

EVALUATED EXIT CRITERIA (*ICOM*)

EVALUATED EXIT CRITERIA documents the evaluation of the PROGRAM STATUS with respect to current exit criteria. [Ref: MPWG]

EVALUATION CRITERIA (*ICOM*)

EVALUATION CRITERIA are measures with form the basis for establishing EVALUATION STANDARDS and for evaluating each offeror's PROPOSAL. [Ref: Abridged AFMC RFP Process Guide]

EVALUATION STANDARDS (*ICOM*)

EVALUATION STANDARDS are used by the SOURCE SELECTION TEAM to measure how well an offeror's PROPOSAL satisfies the EVALUATION CRITERIA. The standards establish a uniform baseline against which an offeror's solution is compared to determine its value to the government. [Ref: AFMC RFP PROCESS GUIDE]

EVENTS (*ICOM*)

EVENTS are situations that bring to light a problem with the way the MOD PROCESS works. These EVENTS may lead to the development of PROCESS DIRECTION. [Ref: Synergy]

EXECUTE RESOURCES (*ACTIVITY A32*)

The activity EXECUTE RESOURCES expends appropriated funds in accordance with MOD DIRECTION, COMPTROLLER DIRECTION, and the BUDGET SUBMISSION. [Ref: MPWG]

EXTERNAL RECOMMENDATIONS (*ICOM*)

EXTERNAL RECOMMENDATIONS are suggestions from AF Personnel on the improvement of the the MOD PROCESS works. [Ref: Synergy]

FARS (*ANNOTATION*)

FARS are Federal Acquisition Regulations. [Ref: Synergy]

FUNCTIONAL CHECK RESULTS *(ICOM)*

FUNCTIONAL CHECK RESULTS detail a pass or fail ruling based on the operational test of a MODIFIED ASSET. [Ref: Synergy]

FUND MOD *(ACTIVITY A3)*

The activity FUND MOD budgets for and executes MOD funds. [Ref: MPWG]

FUNDING DIRECTION *(CONSTITUENT TERM)*

FUNDING DIRECTION is external direction concerning the funding of program requirements that are OUT-OF-CYCLE. This direction forces MOD STAFF to identify internal sources of funds. [Ref: MPWG]

FUNDING DISCREPANCIES *(ICOM)*

[Ref:]

FUNDING REQUIREMENTS *(ICOM)*

[Ref:]

FYDP *(CONSTITUENT TERM)*

FYDP is Fiscal Year Defense Plan. [Ref: Synergy]

GO-AHEAD *(ICOM)*

A GO-AHEAD is the SINGLE MANAGER'S determination that the altering of an ASSET complies with the MOD PLAN. [Ref: Synergy]

HQ USAF *(CONSTITUENT TERM)*

HQ USAF is Headquarters, United States Air Force. It consists of SAF and Air Staff. [Ref: Synergy]

HQ USAF/LG *(ICOM)*

[Ref:]

HQ USAF/LGS *(ICOM)*

[Ref:]

IDENTIFIED OPPORTUNITIES *(ICOM)*

IDENTIFIED OPPORTUNITIES are situations in which multiple MODIFICATIONS can occur on the same ASSET at the same time. [Ref: MPWG]

IDENTIFY AVAILABLE FUNDING *(Activity A3211)*

The activity IDENTIFY AVAILABLE FUNDING determines the AVAILABLE FUNDING after reviewing OUT-OF-CYCLE PROGRAM DIRECTION, TOTAL FUNDING AUTHORITY, and CONGRESSIONAL DIRECTION. [Ref: MPWG]

IDENTIFY FUNDING DISCREPANCIES *(ACTIVITY A3213)*

The activity IDENTIFY FUNDING DISCREPANCIES identifies deviations between AVAILABLE FUNDING and FUNDING REQUIREMENTS. [Ref: MPWG]

IDENTIFY KIT DELIVERY SCHEDULE *(ACTIVITY A4135)*

The activity IDENTIFY KIT DELIVERY SCHEDULE estimates the vendor's capability to produce and supply the number of KITS required to complete a MOD. [Ref: MPWG]

IDENTIFY MAJCOM PRIORITIES *(ACTIVITY A313)*

The activity IDENTIFY MAJCOM PRIORITIES prioritizes investment programs to identify which ones the USER prefers to pay for. [Ref: Synergy]

IDENTIFY OPPORTUNITIES TO COMBINE MODS *(ACTIVIY A4134)*

The activity IDENTIFY OPPORTUNITIES TO COMBINE MODS reviews the SCOPE OF EFFORT and ASSET AVAILIBILITY of various MODS to identify opportunities to minimize ASSET down time. [Ref: MPWG]

IDENTIFY PERFORMANCE DISCREPANCIES *(ACTIVITY A62)*

The activity IDENTIFY PERFORMANCE DISCREPANCIES reviews the SM MDA USER STAFF AGREEMENT to judge the SINGLE MANAGER'S ability to obligate funds. [Ref: Synergy]

IDENTIFY REQUIRED FUNDING (*ACTIVITY A3212*)

The activity IDENTIFY REQUIRED FUNDING determines FUNDING REQUIREMENTS after reviewing OUT-OF-CYCLE PROGRAM DIRECTION and VALIDATED P3A DATA. [Ref: MPWG]

IDENTIFY RISK AREAS (*ACTIVIY A4141*)

The activity IDENTIFY RISK AREAS determines what RISK AREAS to evaluate. [Ref: MPWG]

IDENTIFY SM MOD PRIORITY (*ACTIVITY A4131*)

The activity IDENTIFY SM MOD PRIORITY reprioritizes the MOD LIST from the percpective of a SINGLE MANAGER. [Ref: MPWG]

IDENTIFY SOURCE TYPE (*ACTIVITY A431*)

The activity IDENTIFY SOURCE TYPE determines whether a COMMERCIAL CONTRACTOR or DEPOT MAINTENANCE will be selected to alter the ASSET. [Ref: Synergy]

INDUCT ASSET (*ACTIVITY A541*)

The activity INDUCT ASSET formally admits and prepares an ASSET for KIT installation. [Ref: Synergy]

INDUCTED ASSET (*ICOM*)

An INDUCTED ASSET is an ASSET that has been prepared for KIT installation along with the KIT to be installed. [Ref: Synergy]

INDUCTION DATA (*ICOM*)

[Ref:]

INFORMATION SYSTEMS (*ICOM*)

INFORMATION SYSTEMS are automated systems which collect and maintain data and information. [Ref: Synergy]

INITIAL COST AND RISK (*ANNOTATION*)

An INITIAL COST AND RISK is a rough estimate of cost and risk for each MOD SOLUTION ALTERNATIVE before it is approved as a MOD. Historical PRODUCTION DATA will form the basis of these estimates. [Ref: Synergy]

INITIAL MOD PLAN (*ICOM*)

An INITIAL MOD PLAN is the preliminary documentation of the strategy for managing a MOD. It may include the initial versions of the ENGINEERING SOLUTION, ESTIMATED COST, or MOD SCHEDULE, and the risk associated with each of these. [Ref: Synergy]

INSTALL KIT (*ACTIVITY A542*)

[Ref:]

INSTALL SCHEDULE (*ICOM*)

An INSTALL SCHEDULE is an agenda for the MODIFICATION of an ASSET. [Ref: MPWG]

INSTALLATION INSTRUCTIONS (*ICOM*)

[Ref:]

INSTALLATION PRODUCTION DATA (*ICOM*)

INSTALLATION PRODUCTION DATA is PRODUCTION DATA resulting from the installation of a KIT on an ASSET. [Ref: Synergy]

INSTALLER (*ICOM*)

The INSTALLER is the DOD organization that conducts Programmed DEPOT MAINTENANCE (PDM) on an ASSET and installs KITS. [Ref: Synergy]

INVALID P3A DATA (*ICOM*)

INVALID P3A DATA is P3A DATA that does not conform to other MOD PLAN information and PERFORMANCE REPORTS. [Ref: MPWG]

ISSUE BUDGET AUTHORITY (*ACTIVITY A323*)

The activity ISSUE BUDGET AUTHORITY allocates funds to weapon system programs, totals the PROGRAM AUTHORITY (PA) for each weapon system, and gives the command the authority to use the funds. [Ref: MPWG]

ISSUE PROGRAM AUTHORITY *(ACTIVITY A321)*

The activity ISSUE PROGRAM AUTHORITY allocates funds to MOD program requirements. [Ref: MPWG]

KIT *(ICOM)*

A KIT is the assembly of all material required to accomplish a complete configuration change of an ASSET as specified in the pertinent TCTO. [Ref: Abridged AFM 67-1]

KIT DELIVERY SCHEDULE *(ICOM)*

MPWG [Ref: AS IS]

KIT MATERIAL *(ICOM)*

KIT MATERIAL consists of the material necessary to manufacture a KIT. [Ref: Synergy]

LABOR COSTS *(ICOM)*

[Ref:]

LABOR ESTIMATES *(ICOM)*

LABOR ESTIMATES typically outline the required manhours for skilled personnel to implement and develop the ENGINEERING SOLUTION. [Ref: MPWG]

LEVELS OF RISK *(ICOM)*

[Ref:]

MAD *(ACRONYM)*

MAD is Mission Area Director. [Ref: MPWG]

MAKE ACQUISITION DECISION *(ACTIVITY A122-4)*

The activity MAKE ACQUISITION DECISION determines whether or not to procede to the next milestone. [Ref: MPWG]

MANUFACTURE KITS (*ACTIVITY A52*)

The activity MANUFACTURE KITS assembles KIT MATERIAL into a KIT. [Ref: MPWG]

MATERIAL COSTS (*ICOM*)

[Ref:]

MATERIAL ESTIMATES (*ICOM*)

MATERIAL ESTIMATES identify the quantities of piece parts, initial spares, TECH DATA, support equipment, trainer equipment, software, simulators necessary to develop and implement an ENGINEERING SOLUTION. [Ref: MPWG]

MDA (*ACRONYM*)

MDA is MILESTONE DECISION AUTHORITY [Ref: MPWG]

MDA RECOMMENDATION (*ICOM*)

[Ref:]

MILESTONE DECISION AUTHORITY (*ICOM*)

A MILESTONE DECISION AUTHORITY assesses the progress of the alteration of an ASSET at the end of each acquisition phase. [Ref: Synergy]

MILESTONE SCHEDULE (*ANNOTATION*)

[Ref:]

MISSION REQUIREMENTS (*ICOM*)

MISSION REQUIREMENTS identify the number of ASSETS required by the USER to carryout its mission. [Ref: MPWG]

MMS (*ICOM*)

MMS is MODIFICATIONS MANAGEMENT SYSTEM. [Ref: MPWG]

MOD (*CONSTITUENT TERM*)

MOD is MODIFICATION. [Ref: Synergy]

MOD DIRECTION (*ICOM*)

MOD DIRECTION is DIRECTION which governs the MOD PROCESS as a whole and/or specifies when specific MODS may proceed. MOD DIRECTION is divided into PROCESS DIRECTION and PROGRAM DIRECTION. [Ref: Synergy]

MOD LIST (*ICOM*)

A MOD LIST is a USER's prioritized list of approved MODS. [Ref: MPWG]

MOD PERSONNEL (*ICOM*)

MOD PERSONNEL are all organic personnel involved in the MOD PROCESS. MOD PERSONNEL includes of SM PERSONNEL, USER STAFF, and MOD STAFF. [Ref: MPWG]

MOD PLAN (*ICOM*)

A MOD PLAN documents the strategy for managing a MOD It includes an ESTIMATED COST, ENGINEERING SOLUTION, RISK ASSESSMENT, and MOD SCHEDULE. At any point in the MOD PROCESS the MOD PLAN can be represented by a number of documents. Examples of these documents are an AF FORM 3525, an Integrated Management Plan, and an Acquisition Plan. [Ref: Synergy]

MOD PROCESS (*CONSTITUENT TERM*)

MOD PROCESS includes the planning, budgeting, procuring, managing, and implementation of a MOD. [Ref: Abridged AF MODIFICATION PROCESS DESCRIPTION (TEST)]

MOD SCHEDULE (*ICOM*)

A MOD SCHEDULE reflects the timeline for the development of a PROOFED KIT, manufacturing of KITS, installation of KITS, and performing the functional check. The MOD SCHEDULE is part of the MOD PLAN. [Ref: Synergy]

MOD SOLUTION (*ICOM*)

A MOD SOLUTION is a strategy for a MOD selected to fulfill the USER's REQUIREMENT. [Ref: MPWG]

MOD SOLUTION ALTERNATIVES *(ICOM)*

[Ref:]

MOD STAFF *(ICOM)*

MOD STAFF are MOD PERSONNEL at HQ USAF. [Ref: MPWG]

MODIFICATION *(CONSTITUENT TERM)*

A MODIFICATION is the change in the fit or function of an ASSET in order to correct a deficiency or improve its capability. [Ref: MPWG]

MODIFIED ASSET *(ICOM)*

A MODIFIED ASSET is an ASSET that has undergone a change in configuration through the installation of a KIT, but has not undergone a functional check. [Ref: Synergy]

MODIFY ASSET *(ACTIVITY A54)*

The activity MODIFY ASSET changes an ASSET'S configuration through the induction of the ASSET and installation of a KIT, and ensures that the ASSET conforms to a USER's performance requirements by performing a functional check. [Ref: Synergy]

MONITOR PERFORMANCE *(ACTIVITY A6)*

The activity MONITOR PERFORMANCE is the act of reviewing operation prodcution, identifying financial discrepancies, and reporting on financial performance. [Ref: MPWG]

NEGATIVE FEEDBACK *(ICOM)*

[Ref:]

NEGOTIATE CONTRACT *(ACTIVITY A436)*

The activity NEGOTIATE CONTRACT establishes an agreement between the SINGLE MANAGER responsible for a MOD and the CONTRACTOR selected to perform the work. The details of this agreement are laid out in a CONTRACT. [Ref: Synergy]

NO-GO (*ICOM*)

A NO-GO is a determination that the altering of the ASSET is not progressing as expected and, therefore, the MOD PLAN must be revised. A NO-GO determination may result from a problematic TRIAL INSTALL KIT or from a cost or MOD SCHEDULE slip. [Ref: MPWG]

NON-DPEM LABOR RATES (*ICOM*)

NON-DPEM LABOR RATES identify the rate charged for manhours for personnel other than organic depot. [Ref: MPWG]

NON-MOD AF PRIORITIES (*ICOM*)

[Ref:]

NON-MOD SOLUTION (*ICOM*)

A NON-MOD SOLUTION is a POTENTIAL MATERIAL STRATEGY that was identified as an alternative to a MOD. [Ref: Synergy]

OSD (*CONSTITUENT TERM*)

OSD is Office of the Secretary of Defense. [Ref: Synergy]

OUT-OF-CYCLE PROGRAM DIRECTION (*ICOM*)

OUT-OF-CYCLE PROGRAM DIRECTION is MOD DIRECTION concerning the development of unprogrammed or changed requirements. This DIRECTION is communicated verbally or in writing and will generally include FUNDING DIRECTION. [Ref: MPWG]

P3A DATA (*ICOM*)

P3A DATA is cost, MOD SCHEDULE, and KIT quantity information. The data includes contract data, weapon system codes, method of installation, program elements, and program description. [Ref: MPWG]

PEM (*ICOM*)

PEM is Program Element Monitor. The PEM is an advocate for the USER. [Ref: Synergy]

PERFORM FUNCTIONAL CHECK (*ACTIVITY A543*)

The activity PERFORM FUNCTIONAL CHECK tests MODIFIED ASSETS to verify that they function as required by the USER. An ASSET that passes the functional check is returned to the USER, one that does not is repaired. [Ref: Synergy]

PERFORM TRIAL INSTALLATION (*ACTIVITY A512*)

The activity PERFORM TRIAL INSTALLATION incorporates a TRIAL INSTALL KIT in an ASSET. [Ref: MPWG]

PERFORMANCE DISCREPANCIES (*ICOM*)

PERFORMANCE DISCREPANCIES are deviations in execution, obligation, and expenditure data from the SM MDA AGREEMENT and BUDGET SUBMISSIONS. [Ref: MPWG]

PERFORMANCE REPORTS (*ICOM*)

PERFORMANCE REPORTS document the analysis of current data against targets. PERFORMANCE REPORTS include execution and obligation expenditure data. They are provided to the DOD COMPTROLLER to identify discrepancies and assess performance. [Ref: MPWG]

PLAN MOD (*ACTIVITY A4*)

The activity PLAN MOD maps out the activities MOD PERSONNEL must undertake to ensure the successful completion of a MOD. [Ref: Synergy]

PLAN PRODUCTION (*ACTIVITY A413*)

The activity PLAN PRODUCTION develops a MOD SCHEDULE for the altering of an ASSET. [Ref: Synergy]

POTENTIAL MATERIAL STRATEGIES (*ICOM*)

POTENTIAL MATERIAL STRATEGIES document operational requirements and mission needs of a REQUIREMENT, outline how these needs can be met, and make an INITIAL COST AND RISK assessment for each strategy. [Ref: Synergy]

PPBS (*CONSTITUENT TERM*)

PPBS is Planning, Programming, and Budgeting System. PPBS is an integrated DOD system for the establishment, maintenance, and revision of the Future Year Defense Plan and the DOD budget. An AFPD regarding PPBS is AFPD 16-5. [Ref: Abridged AFSC Financial Management Handbook]

PRELIMINARY ALTERED ASSET (*ICOM*)

PRELIMINARY ALTERED ASSET is an ASSET that has had a KIT installed but has not been proofed. [Ref: MPWG]

PREPARE CONTRACT (*ACTIVITY A43*)

The activity PREPARE CONTRACT determines whether a COMMERCIAL CONTRACTOR or DEPOT MAINTENANCE will alter the ASSET and, if necessary, solicits COMMERCIAL CONTRACTORS, selects a CONTRACTOR, and develops a CONTRACT. [Ref: Synergy]

PREPARE REQUEST FOR PROPOSAL (*ACTIVITY A432*)

The activity PREPARE REQUEST FOR PROPOSAL is performed to solicit PROPOSALS from COMMERCIAL CONTRACTORS. The REQUEST FOR PROPOSAL is based on the PROCURABLE PACKAGE and is prepared by SM PERSONNEL. [Ref: Synergy]

PREPARE SOURCE SELECTION PLAN (*ACTIVITY A434*)

The activity PREPARE SOURCE SELECTION PLAN defines the strategy and criteria used to select the CONTRACTOR. [Ref: MPWG]

PROCESS DIRECTION (*ICOM*)

PROCESS DIRECTION is DIRECTION on how to manage and plan for the alteration of an ASSET. PROCESS DIRECTION is not program specific. Examples of PROCESS DIRECTION include AFI 10-501, AFI 10-601, and the AF MODIFICATION PROCESS DESCRIPTION (TEST). [Ref: MPWG]

PROCURABLE PACKAGE (*ICOM*)

A PROCURABLE PACKAGE is a package that contains all essential information for a CONTRACTOR to assemble, manufacture, install, deliver, and complete an end product for the USER. This information may include some or all of the elements of the MOD PLAN. [Ref: MPWG]

PRODUCT IMPROVEMENT DATA (*ICOM*)

PRODUCT IMPROVEMENT DATA is information from the Product Improvement Working Group, System Safety Group, Modifications Proposals, Deficiency Reports, Suggestion Program, etc., used to define the ENGINEERING SOLUTION. [Ref: MPWG]

PRODUCT IMPROVEMENT TEAM *(ICOM)*

The PRODUCT IMPROVEMENT TEAM is made up of IPT representatives who act upon the various PRODUCT IMPROVEMENT DATA. [Ref: MPWG]

PRODUCTION DATA *(ICOM)*

PRODUCTION DATA is production expressed in hours, dollars, costs, or other units. PRODUCTION DATA includes FUNCTIONAL CHECK RESULTS, INDUCTION DATA, and INSTALLATION PRODUCTION DATA. [Ref: MPWG]

PRODUCTION GO-AHEAD *(ICOM)*

A PRODUCTION GO-AHEAD is a Milestone III decision memorandum issued by the MILESTONE DECISION AUTHORITY approving the full-scale manufacturing of KITS. This is issued only after the successful completion of a PROOFED KIT. [Ref: Synergy]

PRODUCTION REPORTS *(ICOM)*

PRODUCTION REPORTS are status reports for a MOD which are based on PRODUCTION DATA and are used as the basis for making ACQUISITION DECISIONS, issuing PROGRAM MANAGEMENT DIRECTIVES, and managing Configuration. [Ref: MPWG]

PROGRAM AUTHORITY *(ICOM)*

PROGRAM AUTHORITY (PA) is used to manage procurement and RDT&E appropriations. For RDT&E it is the only document that can convey final authority to proceed with RDT&E programs defined in the PROGRAM MANAGEMENT DIRECTIVE. PROGRAM AUTHORITY for aircraft, missiles, and other procurement activities, when combined with BUDGET AUTHORITY, is the only document issued by HQ USAF that authorizes procuring commands to initiate program/procurement actions. The PROGRAM AUTHORITY is backup documentation to the BUDGET AUTHORITY. [Ref: MPWG]

PROGRAM DIRECTION *(ICOM)*

PROGRAM DIRECTION is program-specific DIRECTION applicable to a particular MOD, which specifies the cost, MOD SCHEDULE, and performance results that must be achieved. PROGRAM DIRECTION is conveyed by PROGRAM MANAGEMENT DECISIONS, ACQUISITION DECISIONS, and OUT-OF-CYCLE PROGRAM DECISIONS. [Ref: MPWG]

PROGRAM MANAGEMENT DIRECTIVE *(ICOM)*

[Ref:]

PROGRAM STATUS *(ICOM)*

PROGRAM STATUS is the result of the Program Management Review. [Ref: MPWG]

PROOFED KIT *(ICOM)*

A PROOFED KIT is a KIT that has met the minimum requirements of KIT proofing. [Ref: MPWG]

PROPOSAL *(ICOM)*

A PROPOSAL is a response to the REQUEST FOR PROPOSAL which outlines how a COMMERCIAL CONTRACTOR intends to accomplish STATEMENT OF WORK taskings. [Ref: Synergy]

REALLOCATE FUNDING *(ACTIVITY A312)*

The activity REALLOCATE FUNDING reallocates funds or directs a change in P3A cost, MOD SCHEDULE, or KIT quantity information. This activity also identifies if any PROCESS DIRECTION was overlooked and revalidates corrected data.. [Ref: MPWG]

RECOMMEND MDA *(ACTIVITY A4144)*

The activity RECOMMEND MDA identifies the MDA for a MOD program based on the RISK MANAGEMENT PLAN, ESTIMATED COST, and MOD DIRECTION. [Ref: MPWG]

RECONCILE TOTAL COSTS *(ACTIVITY A314)*

The activity RECONCILE TOTAL COSTS totals each P3A's cost information and compares VALIDATED P3A DATA totals by weapon system against the USER FUNDING PROFILE. [Ref: MPWG]

REJECTED PROGRAM AUTHORITY *(ICOM)*

[Ref:]

REPORT PERFORMANCE (*ACTIVITY A63*)

[Ref:]

REPROGRAM FUNDING (*ACTIVITY A3214*)

The activity REPROGRAM FUNDING reallocates funds for purposes other than initailly appropriated. [Ref: MPWG]

REPROGRAMMED FUNDING (*ICOM*)

[Ref:]

REQUEST FOR PROPOSAL (*ICOM*)

A REQUEST FOR PROPOSAL solicits the services of COMMERCIAL CONTRACTORS. This document includes the STATEMENT OF WORK and the CONTRACTOR DATA REQUIREMENTS LIST. [Ref: Synergy]

REQUIREMENT (*ICOM*)

A REQUIREMENT documents the USER'S need for improved or new capability. A REQUIREMENT initiates the process of modifying an ASSET and the management activities associated with it. [Ref: MPWG]

RESOURCE ALLOCATION (*ICOM*)

RESOURCE ALLOCATION consists of BUDGET AUTHORITY and PROGRAM AUTHORITY and documents how funds are allocated to programs and weapon systems. . [Ref: MPWG]

REVIEW PRODUCTION (*ACTIVITY A61*)

The activity REVIEW PRODUCTION assesses the progress of the alteration of an ASSET, makes GO-AHEAD and NO-GO decisions, prepares PRODUCTION REPORTS for MOD STAFF and USER STAFF, and manages ASSET Configuration. [Ref: MPWG]

REVISE MOD PLAN (*ACTIVITY A42*)

The activity REVISE MOD PLAN updates the MOD PLAN when new information becomes available. It also reflects the iterative process of revising established cost, MOD SCHEDULE, and other MOD PLAN components as a result of intermediate outputs of the activity PLAN MOD. [Ref: MPWG]

REVISION DIRECTION (*ICOM*)

REVISION DIRECTION is DIRECTION to SM PERSONNEL to revise the MOD PLAN due to INVALID P3A DATA. [Ref: Synergy]

RISK AREAS (*ICOM*)

[Ref:]

RISK EVALUATION (*ICOM*)

[Ref:]

RISK MANAGEMENT PLAN (*ICOM*)

A RISK MANAGEMENT PLAN documents the risk level associated with a MOD and outlines how the SINGLE MANAGER will manage this risk. [Ref: Synergy]

SAF (*CONSTITUENT TERM*)

SAF is Secretary of the Air Force. In this context, SAF includes the Secretariat support staff. [Ref: Synergy]

SAF/AQXR (*ICOM*)

[Ref:]

SAF/FMBIA (*ICOM*)

[Ref:]

SCHEDULE ASSET MODIFICATION (*ACTIVITY A53*)

The activity SCHEDULE ASSET MODIFICATION prepares an agenda for the MODIFICATION of an ASSET. This agenda is dependent upon the availability of resources, such as funds and personnel. SCHEDULE ASSET MODIFICATION may also include using PRODUCTION DATA to update an existing INSTALL SCHEDULE. [Ref: MPWG]

SCOPE OF EFFORT (*ICOM*)

SCOPE OF EFFORT is the magnitude of resources required to implement a MOD. [Ref: MPWG]

SECDEF (*ENTITY*)

SECDEF is "Secretary of Defense". The SECDEF is the principal assistant to the President in all matters relating to National Defense. Under the direction of the President, the SECDEF exercises direction, authority, and control over the DOD. [Ref: Abridged SAF/AQ Program Element Monitor/Action Officer Handbook]

SECDEF DIRECTION (*ICOM*)

SECDEF DIRECTION includes all DIRECTION to the DOD COMPTROLLER and DIRECTION provided to MOD PERSONNEL and to Lead Commands, imposed directly, by delegation, or by reference. SECDEF DIRECTION includes ACQUISITION POLICIES AND PROCEDURES. [Ref: Synergy]

SELECT CONTRACTOR (*ACTIVITY A435*)

The activity SELECT CONTRACTOR identifies which CONTRACTOR will alter the ASSET. This selection is made by the SOURCE SELECTION TEAM. They examine the needs, facts, recommendations, and government policy relevant to a contract award in a competitive acquisition of a MOD. [Ref: Abridged MM Operating Instruction 400-22; Logistics Dictionary]

SINGLE MANAGER (*CONSTITUENT TERM*)

A SINGLE MANAGER (SM) is the individual responsible for the successful completion of one MODIFICATION. The SINGLE MANAGER can either be a System Program Director, a Product Group Manager, or a Material Group Manager. [Ref: Synergy]

SINGLE MANAGER COMMUNITY (*ICOM*)

The SINGLE MANAGER COMMUNITY is made up of all the SINGLE MANAGERS in DOD organizations. This community provides MOD PERSONNEL with information on systems, equipment, and munitions that they own and manage that are similar to the ASSET being modified. [Ref: Synergy]

SM MDA USER STAFF AGREEMENT (*ICOM*)

The SM MDA USER STAFF AGREEMENT is a formal baseline agreement between the SINGLE MANAGER, USER STAFF, and MILESTONE DECISION AUTHORITY on how programs will be executed. This agreement outlines COST, MOD SCHEDULE, and quality targets. It is the baseline against which all changes to program requirements, COST, and MOD SCHEDULE are made. For ACAT I and II programs an ACQUISITION PROGRAM BASELINE is used and for ACAT III and IV an AF FORM 3525 may be used. [Ref: MPWG]

SM MOD PRIORITY (*ICOM*)

SM MOD PRIORITY identifies the urgency with which the MODIFICATION is required to be completed. The SM MOD PRIORITY is identified by SM PERSONNEL. [Ref: MPWG]

SM PERSONNEL (*ICOM*)

SM PERSONNEL consists of the SINGLE MANAGER and all his/her support staff. [Ref: Synergy]

SOURCE SELECTION PLAN (*ICOM*)

The SOURCE SELECTION PLAN provides specific detail on how the source selection process will be organized and conducted. It describes the organization and the responsibilities of the SOURCE SELECTION TEAM, the EVALUATION CRITERIA, and detailed procedures for PROPOSAL evaluation. [Ref: AFMC RFP PROCESS GUIDE]

SOURCE SELECTION PROCEDURES (*ANNOTATION*)

SOURCE SELECTION PROCEDURES are found in AFR 70-15, Source Selection Policy and Procedures, and AFR 70-30, Streamlined Source Selection Procedures. These regulations are subsets of PROCESS DIRECTION. [Ref: Synergy]

SOURCE SELECTION STRATEGY (*ICOM*)

SOURCE SELECTION STRATEGY is the approach used to select the source. [Ref: MPWG]

SOURCE SELECTION TEAM (*ANNOTATION*)

The SOURCE SELECTION TEAM is made up of individuals who select the CONTRACTOR, whether through a formal competitive acquisition process or just by identifying the DEPOT MAINTENANCE organization. [Ref: Synergy]

SOURCE TYPE (*ICOM*)

A SOURCE TYPE is either a COMMERCIAL CONTRACTOR DETERMINATION or a DEPOT MAINTENANCE DETERMINATION. [Ref: Synergy]

STATEMENT OF WORK (*ANNOTATION*)

A STATEMENT OF WORK consists of the technical specifications and the contractual information provided to the CONTRACTOR in order for them to complete their tasking. The STATEMENT OF WORK is part of the REQUEST FOR PROPOSAL [Ref: Synergy]

SUFFICIENT FUNDING (*ICOM*)

[Ref:]

SUPPORT USER MOD REQUIREMENTS (*ACTIVITY A-0*)

The activity SUPPORT USER MOD REQUIREMENTS modifies the USER'S ASSET to support their operational requirements for safe conditions, and reliable and maintainable ASSETS. [Ref: Synergy]

TCTO (*ICOM*)

TCTO is TIME COMPLIANCE TECHNICAL ORDER. [Ref: Synergy]

TECH DATA (*ICOM*)

TECH DATA is all engineering, operational, and maintenance data related to an ASSET. [Ref: MPWG]

TIME COMPLIANCE TECHNICAL ORDER (*CONSTITUENT TERM*)

A TIME COMPLIANCE TECHNICAL ORDER is an instruction for ensuring that a retrofit change on equipment is accomplished, one time inspections/replacement of components are initiated, and different computer programs are authorized within a specific time. [Ref: MPWG]

TOTAL COST DISCREPANCY (*ICOM*)

A TOTAL COST DISCREPANCY is a difference between the USER FUNDING PROFILE and the VALIDATED P3A DATA. This difference will cause MOD PERSONNEL to REALLOCATE FUNDING. [Ref: MPWG]

TOTAL FUNDING AUTHORITY (*ICOM*)

TOTAL FUNDING AUTHORITY is the authority to issue funds from OSD based on CONGRESSIONAL APPROPRIATION. [Ref: MPWG]

TOTAL MOD COSTS (*ACTIVITY A4123*)

The activity TOTAL MOD COSTS sums the estimated labor and MATERIAL COSTS of performing a MODIFICATION. The sums are adjusted for inflation in the outyears. [Ref: MPWG]

TRIAL INSTALL KIT (*ICOM*)

[Ref:]

TRIAL INSTALL KIT (*ICOM*)

A TRIAL INSTALL KIT is the translation of a design into detailed production drawings, KIT listings, INSTALLATION INSTRUCTIONS, etc. [Ref: AFMC Guide to Modification Management Process]

TRIAL INSTALLATION DATA *(ICOM)*

[Ref:]

UNAPPROVED PROGRAM MANAGEMENT DIRECTIVE *(ICOM)*

An UNAPPROVED PROGRAM MANAGEMENT DIRECTIVE is a PROGRAM MANAGEMENT DIRECTIVE that has not been finalized or approved by the required signator. [Ref: Synergy]

UNAPPROVED STRATEGY *(ICOM)*

An UNAPPROVED STRATEGY is a determination that the POTENTIAL MATERIAL STRATEGIES are inadequate. It indicates that the responsible SM PERSONNEL must develop additional MOD SOLUTION ALTERNATIVES. [Ref: Synergy]

UNIT RESOURCE COSTS *(ICOM)*

UNIT RESOURCE COSTS are the combination of material resource costs and non-material resource costs for items provided by the CONTRACTOR. Material resource costs are the costs used to project material expenses and to determine prices, while non-material resource costs are labor rates, salaries, and other cost rates such as utilities, etc. [Ref: Synergy]

UNSUCCESSFULLY ALTERED ASSET *(ICOM)*

An UNSUCCESSFULLY ALTERED ASSET is a MODIFIED ASSET that has failed the functional check. [Ref: Synergy]

UPDATED ASSET DATA *(ICOM)*

UPDATED ASSET DATA is ASSET DATA which includes new information resulting from the MODIFICATION of an ASSET. [Ref: Synergy]

UPDATED TECH DATA *(ICOM)*

UPDATED TECH DATA is TECH DATA which includes new information resulting from the development and manufacturing of KITS. [Ref: Synergy]

USER *(ICOM)*

The USER is a weapon system operator in the field. [Ref: MPWG]

USER FUNDING PROFILE *(ICOM)*

The USER FUNDING PROFILE outlines a USER's available funding by fiscal year to complete the MOD, and consists of the total appropriated dollars by weapon system. This information is located in the ABIDES database. [Ref: MPWG]

USER STAFF (*ICOM*)

USER STAFF is the organization(s) requesting a MOD and will generally be the Lead Command. The USER STAFF initiates a MOD by providing their REQUIREMENT to the SINGLE MANAGER responsible for their ASSET. [Ref: MPWG]

VALIDATE P3A DATA (*ACTIVITY A311*)

The activity VALIDATE P3A DATA compares the established P3A cost, MOD SCHEDULE, and KIT quantity information with other MOD PLAN data and PERFORMANCE REPORTS to identify discrepancies. This activity also reviews for consistency with PROCESS DIRECTION. [Ref: MPWG]

VALIDATE PROGRAM AUTHORITY (*ACTIVITY A322*)

The activity VALIDATE PROGRAM AUTHORITY verifies the available funding for PROGRAM AUTHORITY. [Ref: MPWG]

VALIDATED P3A DATA (*ICOM*)

VALIDATED P3A DATA is P3A DATA that conforms to other MOD PLAN information and PERFORMANCE REPORTS. [Ref: MPWG]

VALIDATED PROGRAM AUTHORITY (*ICOM*)

VALIDATED PROGRAM AUTHORITY is PROGRAM AUTHORITY that has been validated against the FUNDING AUTHORITY by SAF/AQXR. [Ref: MPWG]

XOR (*ICOM*)

[Ref:]